タンクモデル及びバード・クリーク、オロンビー・ブルック、ビキン河、木津川、サナガ河、ナム・ムネへの適用 Tank model and its application to Bird Creek, Wollombi Brook, Bikin River, Kitsu River, Sanaga River and Nam Mune

journal or publication title	国立防災科学技術センター研究速報
number	11
page range	1-64
year	1974-06-28
URL	http://id.nii.ac.jp/1625/00002726/

551.579.1:551.482.4(262.2)

Tank model and its application to Bird Creek, Wollombi Brook, Bikin River, Kitsu River, Sanaga River and Nam Mune

M. Sugawara, E. Ozaki, I. Watanabe, Y. Katsuyama

1. Simple tank model for humid regions

1.1. In humid regions, where it rains all the year round and where soil is always wet by rainfall or water supply from groundwater, we can analyse runoff structure of river basins fairly successfully by means of a tank model schematically shown in fig. 1. It is composed of several tanks laid vertically in series.

1.2. We may think that the top tank corresponds to the structure of ground surface and surface discharge, the second tank to the intermediate runoff, while the third and fourth tank to the base discharge from groundwater. We do not think that the correspondence is strictly real, but this model may be an approximation somewhat resembling the finite elements method.

1.3. Though in fig. 1 the top tank has two outlets on the side and each of other three tanks has only one outlet on the side, the number of outlets on the side of each tank is arbitrary, as the case may be. Usually, we set two or three outlets on the side of the top tank and one outlet on the side of each of other tanks, and in most cases the side-outlet of the lowest tank lies on the same level as the tank bottom.

Fig. 1

As the top tank has two or three outlets on the side, the relation between the runoff y and the storage amount X of the top tank is not linear, and the runoff y increases acceleratedly when the

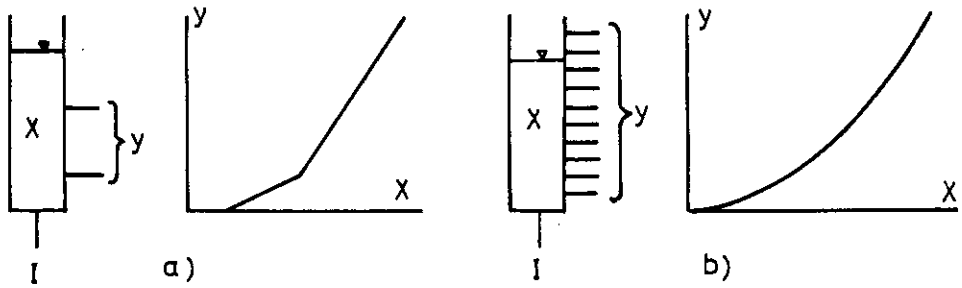

Fig. 2

storage X increases. Therefore, the ratio between the runoff y and the infiltration I from the top tank is not constant, but it increases with the increase of storage X.

If we set many small outlets on the side, then the relation between runoff y and storage X is represented by a smooth curve shown in fig. 2.b). In this way, we can make the relation $y=aX^2$ and other relations which will be used in some cases.

1.4. Sometimes, the infiltration amount per unit time through the outlet at the bottom is limited at some saturation value I_s as shown in fig. 3, where H_s is the corresponding saturation depth of storage X.

1.5. In spite of its simple outlook, the tank model has many good points, as follows:

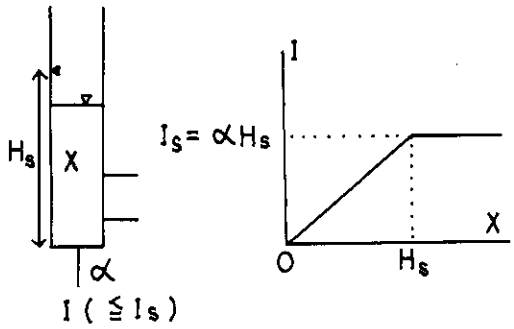

Fig. 3

1) It is simple in its form, and in some extent it has reasonable physical meanings corresponding to the zonal structure of groundwater.

2) It can represent the non-linear character of surface runoff.

3) It can represent several components of runoff, each of the components having its own half period, but from the non-linear character of this model the values of the half periods are not definite, strictly

speaking.

4) Input (rain water) is distributed to each of the components automatically by this non-linear structure.

5) Runoff components from lower tanks are smoothened in shape, and the time-lags are given to them automatically.

1.6. The difficult problem about this model comes from its non-linear character which makes us impossible to find parameters mathematically or by some objective method. The only way is the method of trials and errors.

We put a set of numerical values to the unknown parameters, and after numerical calculation we get the calculated discharge which is compared with the observed one. By subjective judgement after careful observation and comparison of both hydrographs, we change the values of parameters for the next trial. Usually, we can get a good result after about ten trials. There must be some reasonable and objective way of judgement and a method of finding optimum parameters, but we think, trials and errors guided by subjective judgement from experiences will be far more efficient. It may somewhat resemble the driving of a motor car on the street. It is very difficult and probably impossible to make an automatic machine that can drive a car on the street, but many men can drive easily.

1.7. Bikin River and Kitsu River are analysed by this simple tank model.

2. Composite tank model for non-humid regions

2.1. In non-humid regions we must consider the effect of soil moisture, and we make a structure for soil moisture at the bottom of the top tank. But it is not good enough to explain the runoff structure

of non-humid region.

2.2. In a non-humid basin, where some part is wet and the remaining part dry, the surface runoff occurs only in the wet area while in the dry area all the rainfall is absorbed as soil moisture. When the rainy season begins, the wet area grows larger, starting from a small area along the river. We can assume that the wet area spreads along the river. If there is an isolated wet area as shown in fig. 4, the surface runoff from there will be absorbed by the surrounding dry area and cannot reach the river channel.

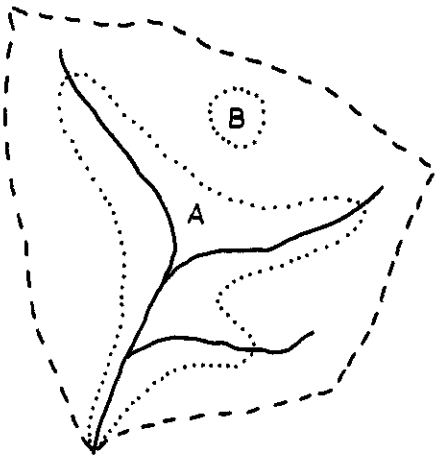

Fig. 4

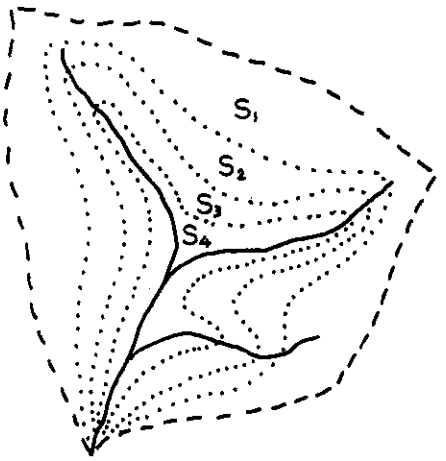

Fig. 5

To approximate the continuous change of wet area, we divide the basin into several zones $S_1, S_2, \cdots, S_m$ as shown in fig. 5 where m=4. It resembles the approximation of a smooth curve by step function.

2.3. After the division into m zones, each zone is represented for simulation by a simple tank model with soil moisture structure in the top tank. Thus we get a composite tank model, composed of $n \times m$ tanks as shown in fig. 6, where n=4, m=4 and the left side is the mountain side, and the right side the river side.

Each of the top tank, the second tank, ••• and the n-th tank of every zone is of the same structure, respectively. The only exception is that there may be some difference in the structure of soil moisture.

Hereafter, we call the water contained as soil moisture confined water, and the other water free water.

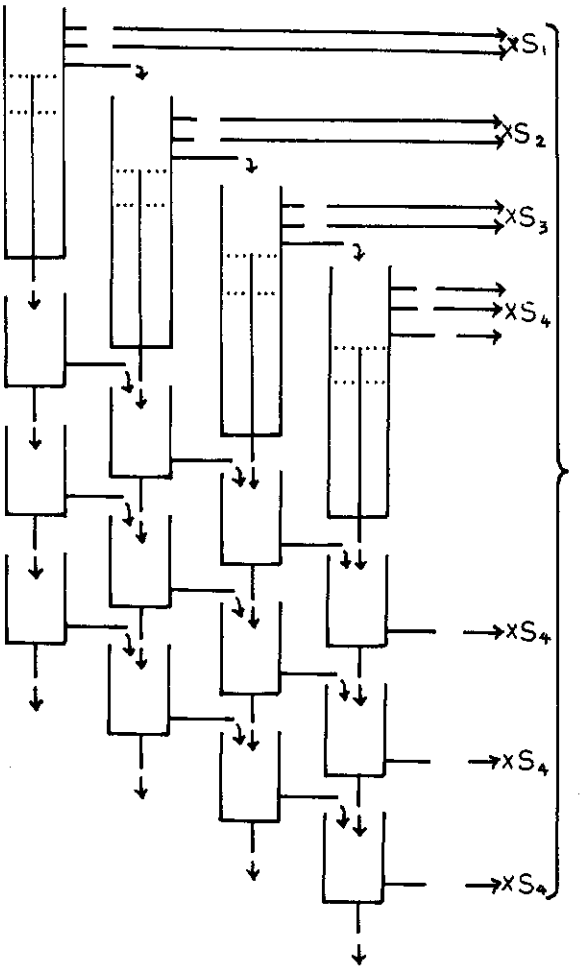

Fig. 6

2.4. In this model free water moves in two directions, horizontal and vertical. Each tank receives water from the upper tank of the same zone or from the mountain-side tank of the same stratum, and transfers water to the lower tank of the same zone or to the river-side tank of the same stratum. There is another important water transfer, that is the water supply to soil moisture from lower free water by capillary action.

2.5. When the dry season comes, free water of the highest zone decreases faster than that of other zones by water transfer to lower zones. After vanishment of free water, soil moisture begins to decrease because there is no water supply from lower free water. In this way, the highest zone becomes dry earliest, and then the second zone, the

third zone, etc. become dry, while the dry season goes on.

In the opposite way, when the wet season comes, the lowest zone becomes wet at first, and then the second lower zone, the third zone, etc. become wet.

The change of wet area can be represented automatically in this way.

2.6. The areal ratios of zones $S_1:S_2: \cdots :S_m$ are the important parameters in this model. If we have much information about hydrological, topographical and geological characters of the basin, we may be able to determine them by using the given information. If we have little or no information, however, we must determine by trials and errors, where we may usually assume for convenience that $S_1, S_2, \cdots, S_m$ are geometrical progressions, and we use such progressions as follows with or without some deformation:

$$S_1:S_2:S_3:S_4 = 3^3:3^2:3:1 = 67.5:22.5:7.5:2.5$$

$$S_1:S_2:S_3:S_4 = (5/2)^3:(5/2)^2:(5/2):1 = 125:50:20:8 \fallingdotseq 61:25:10:4$$

$$S_1:S_2:S_3:S_4 = 2^3:2^2:2:1 = 8:4:2:1 = 53.3:26.7:13.3:6.6$$

2.7. The top tank of the model has two types of outlets on the side:

a) Output through the outlet of type A directly goes to the river channel.

b) Output through the outlet of type B goes to the top tank of the next zone, except in the lowest zone where the output goes to the river channel.

Though in fig. 6 the model has outlets of both types, there are in our final results, outlets of type A only in the case of Bird Creek and Wollombi Brook, and on the contrary, in the case of Sanaga River and Nam Mune there are outlets of type B only.

3. Structure for soil moisture

3.1. We divide the soil moisture into two parts, the primary soil moisture and the secondary soil moisture. We use the words primary and secondary instead of upper and lower, though they are shown in fig. 6 as upper and lower positions for convenience.

When rain comes and the ground surface becomes wet, then the surface runoff occurs. From this point the upper soil moisture is a reasonable word. But there also occurs infiltration. In many cases water may move downward through holes or cracks or faults, in a word, through discontinuous structures of ground surface. Vertical transfer of this kind can occur when the soil surrounding these discontinuous structures has turned wet enough. This is the reason why we use the words primary and secondary.

3.2. Water goes gradually from primary soil moisture to secondary soil moisture. We assume that the transfer velocity T_2 is given as a linear function of the storage amount of secondary soil moisture X_s.

$$T_2 = c_o + c(1 - X_s / C_s),$$

where c_o and c are constants, and C_s the saturation capacity of secondary soil moisture. It means that when secondary soil moisture is empty, transfer amount per day is $c + c_o$, and it tends to c_o when secondary soil moisture tends to its saturation value.

In our final results, the following values are used in most cases:

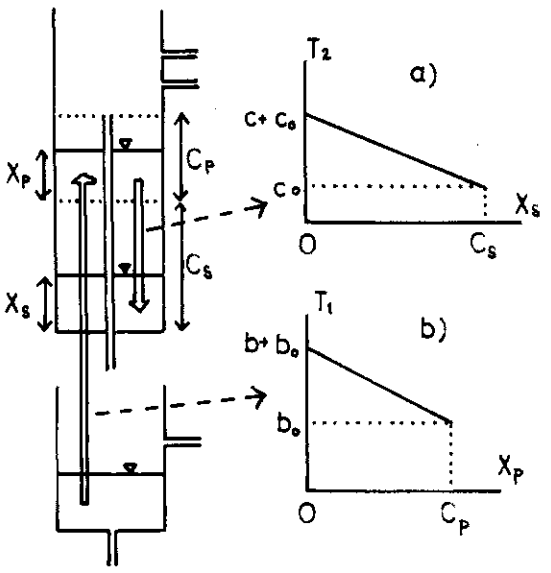

Fig. 7

$C_s = 250$ (mm), $c_o = 0.5$ (mm/day), $c = 1$ (mm/day).

3.3. When primary soil moisture is not saturated and there is free water in lower tanks, water goes up by capillary action so as to fulfill the primary soil moisture. The transfer velocity T_1 is assumed to be given as a linear function of the storage amount X_p of primary soil moisture.

$$T_1 = b_o + b(1 - X_p / C_p),$$

where b_o and b are constants, and C_p the saturation capacity of primary soil moisture.

In our final results, $b_o = b = 3$ (mm/day) and C_p is about 50 mm.

4. Evapotranspiration

4.1. In the basins of Bird Creek, Wollombi Brook and Nam Mune, daily evaporation is measured with evaporimeter. To calculate the effect of evapotranspiration, we subtract the amount of daily evapotranspiration from the top tank as follows:

1) If there is enough of free water in the top tank, 0.8 E is subtracted from free water in the top tank, where E is the measured value of daily evaporation.

2) If there is no free water in the top tank, 0.6 E is subtracted from confined water.

3) If there is not enough of free water X_f to subtract 0.8 E from it, X_f is subtracted from free water and 75% of deficit, namely $0.75(0.8\ E - X_f)$, is subtracted from confined water.

4.2. There is no sufficient reason why we determine the above coefficients 0.8 and 0.6. We have some uncertain experience, that in Japan the mean evapotranspiration from the total basin may be 70% — 80% of the evaporation measured with evaporimeter. With this experience

and some trials at Bird Creek, we have determined the above values.

4.3. As there is no evaporation data in the basin of Sanaga River, daily evaporation is assumed to be 6 mm/day constantly all the year round.

4.4. In the dry season of non-humid regions, when some part of the basin becomes dry, no evapotranspiration can occur from the dry area. Therefore, mean evapotranspiration from the total basin is far smaller than 0.6 E, when most parts of the basin have turned dry.

5. Rule for numerical calculation

5.1. We carry out the numerical calculation step by step as time series, where we define the meaning of coefficient written at each outlet as follows. Consider the simplest case shown in fig. 8. If there is storage X, then the discharge per unit time is $y = \alpha X$, and there remains $X' = (1 - \alpha)X$ as storage. This is the meaning of coefficient α.

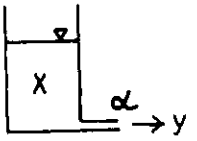

Fig. 8

If α is the coefficient indicating the relation $y = -dX/dt = \alpha X$, there remains after unit time Δt $X' = e^{-\alpha\Delta t}X$, and the discharge per unit time Δt is $(1 - e^{-\alpha\Delta t})X$. Therefore we can consider that the coefficient α of fig. 8 is written instead of $(1 - e^{-\alpha\Delta t})$, which is always less than 1.

5.2. After defining the meaning of coefficient α as above, numerical calculation goes on as the following example shows. Suppose, in the tank shown in fig. 9, where soil moisture is saturated and storage of free water of 20 mm in depth exist, rain of 30 mm and evaporation of 5 mm are given as input. By subtracting $0.8 \times 5 = 4$ (mm) as evapotranspiration and adding 30 mm of rain, we get 46 mm as free water

storage:

$$20 - 0.8 \times 5 + 30 = 46 \text{ (mm)}.$$

We derive the amount of runoff and infiltration as follows:

runoff: $0.35(46 - (25 + 10)) + 0.25(46 - 10)$
$= 12.85$ (mm/day)

infiltration: $0.25 \times 46 = 11.5$ (mm/day)

remaining storage: $46 - 12.85 - 11.5$
$= 21.65$ (mm)

When the free water storage is larger than 60 mm the infiltration is limited at the saturation value 15 (mm/day).

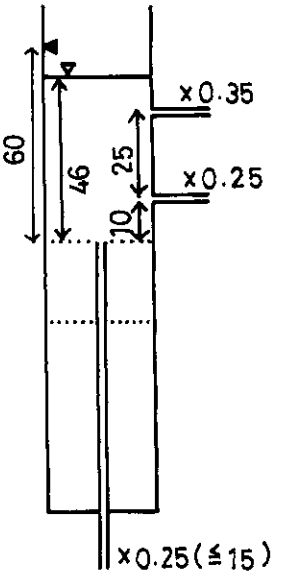

Fig. 9

5.3. We carry out the calculation in the following order: 1) Subtraction of evapotranspiration, 2) absorption of lower free water to primary soil moisture and transfer of water from primary soil moisture to secondary soil moisture, 3) addition of precipitation, 4) calculation of runoff and infiltration from free water storage.

The above calculation is for the top tank, while for lower tanks the calculation goes on in the following order: 1') transfer to primary soil moisture, 2') receipt from the upper tank or from the tank of mountain-side in the same layer, 3') transfer to the lower tank or to the tank of river-side in the same layer.

The order here described is merely a rule. It cannot be reasonable enough. If we change the order the results will be somewhat different. We cannot say which is better, but we have to choose one of them and fix it to carry out numerical calculation.

5.4. We must take care for the calculation of water transfer between zones. We calculate input, output and storage using the unit

of water depth, that is, we consider per unit area. But in the case of water transfer between zones, we must consider the area of zones. Output from the tank of the i-th zone must be multiplied by S_i which is to be considered as quantity, and then it must be divided by S_{i+1} when we consider it as input to the tank of the (i+1)-th zone. Therefore, we must multiply $R_i = S_i/S_{i+1}$, when water transfers from the i-th zone to the (i+1)-th zone.

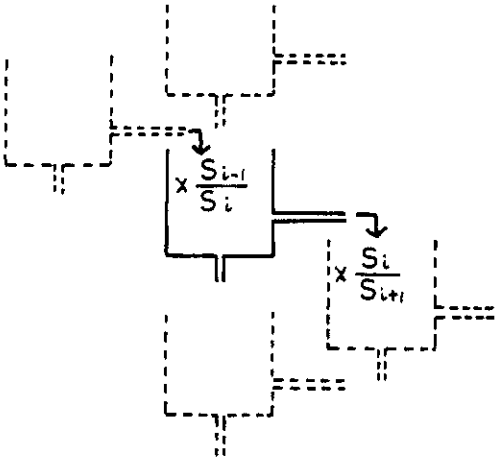

Fig. 10

5.5. From the same reason, the runoff from the i-th zone to the river channel must be multiplied by S_i as fig. 6 shows.

6. Deformation in river channel

6.1. The output from the tank model goes into the river channel, where its hydrograph is deformed by storage effect of the channel. To give the deformation by channel storage, we use two types of models shown in fig. 11.

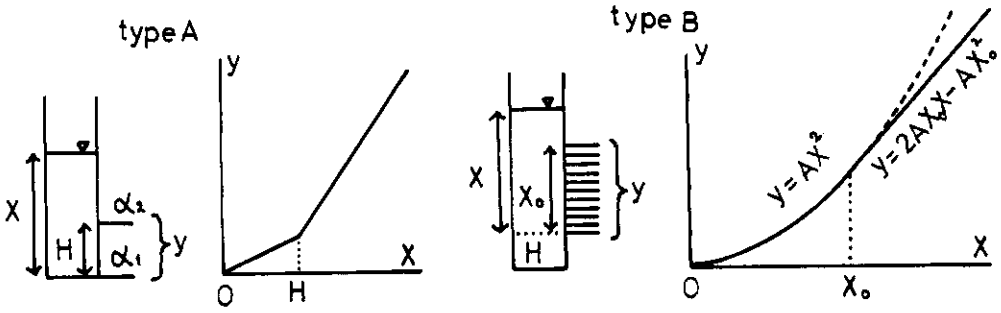

Fig. 11

6.2. The model of type A is simpler and is used for Bikin River, Sanaga River and Nam Mune. This model is a sort of first-order lag system $\alpha/(S + \alpha)$ where its time constant $T = 1/\alpha$ varies as follows: 1) when storage is small ($X \leqq H$), $T = 1/\alpha_1$, and 2) when storage is large ($X \geqq H$), $T = 1/(\alpha_1 + \alpha_2)$.

6.3. The model of type B is used for Bird Creek and Wollombi Brook, and its discharge becomes sometimes very small or vanishes. It has a structure for initial loss at the bottom, and the relation between output y and storage amount X is given by

$$y = AX^2, \qquad \text{when} \qquad X \leqq X_o,$$

where the storage X above the confined storage is measured. If we make local approximation of this model by first-order lag system, its time constant varies reciprocally proportionally to storage. It is a good point of this model. But if we use the relation $y = AX^2$ for all X, there arises a technical trouble in numerical calculation, namely when X becomes large $y = AX^2$ becomes larger than X, and this means that the output is larger than storage. If we solve the differential equation $y = -dX/dt = AX^2$, or if we use an analog computer, there will not appear any contradiction. Of course, even with the use of digital computer, we can avoid the above contradiction by making time interval small enough. But it is rather troublesome with little benefit.

When X is large, deformation by $y = AX^2$ has only small effect, and input turns into output with slight deformation. So we make another practical approximation by replacing the parabola $y = AX^2$ with a curve composed of a part of parabola $y = AX^2$ ($0 \leqq X \leqq X_o$) and its tangent $y = 2AX_oX - AX_o^2$ ($X \geqq X_o$), as shown in fig. 11. If we put $2AX_o = 1$, it gives no deformation when X is large ($X \geqq X_o$). If we put $2AX_o = 0.9$ or 0.8, it gives slight deformation of first-order lag system with short

time constant. In our final result, we put $2AX_o = 0.8$.

6.4. To calculate the deformation effect by the river channel using the model of type B, we also consider the effect of precipitation and evaporation on or from the river channel. We put the ratio of river channel area to the total basin as S_c. Therefore, daily inputs to the model of type B are: 1) output from the tank model and 2) daily precipitation and evaporation multiplied by S_c, where evaporation is negative input. The effect of evaporation from river channel is significant when the river discharge is very small. In our final result, we assume $S_c = 1/250 = 0.4$ %.

The area S_c may not be limited to the area of water surface, but it may include the riparian area. Though the area S_c may vary, depending upon the river discharge, we assume it as constant. The effect of precipitation and evaporation on or from the river channel area is significant only when the discharge is very small, so we can neglect the variation of S_c.

6.5. We do not calculate the effect of precipitation and evaporation, when we use the model of type A which is applied to the river whose minimum discharge is not so small, because the effect is negligible.

6.6. Usually, time lag is given to the calculated discharge to get good fit with the observed discharge.

7. Mean areal precipitation for basin

7.1. Estimation of areal precipitation is the most important and difficult problem. We have no way to judge whether the estimation is correct or not. Even if we can get good calculated discharge by using estimated areal precipitation, estimated areal evapotranspiration and a runoff model, we cannot say that the estimations and the model are good.

They may have some biases compensating each other. Moreover there may exist not small errors in the measurement of discharge.

7.2. As the areal precipitation data are given for the basins of Bird Creek and Wollombi Brook, we have to use them. In the cases of Sanaga River and Nam Mune, precipitation is measured at thirteen and four points, respectively.

Measurements of point precipitation show different patterns of seasonal change, and if we use the simple arithmetical mean of point precipitations as input, we cannot get any good calculated hydrograph showing different seasonal pattern with the observed hydrograph. After some trials, we use the weighted mean for Nam Mune where the weights for Korat and Khon Kaen is half as large as those for Surin and Roiet.

In the case of Sanaga River, there is a significant difference in the patterns of seasonal change of observed discharge and calculated discharge, if we use the simple arithmetic mean. And it is found that the rain gauge points having different patterns of seasonal change with observed discharge mostly lie on the boundary or outside of the basin. So we have made the following weighted mean, where the weight given to four points on the boundary and outside of the basin is half as large as the weight given to nine points inside the basin. Though there are a few points inside the basin which ought rather to be given the half weight we dared not do so, because of having no objective reason.

In our calculation only 1 or 1/2 weight is used, because we do not like to use artificial weight. This may be called subjective reason. Of course there will be some mathematical methods which will give reasonable weights. But from consideration of their reliability, we do not like to use them.

7.3. There remains another important problem of the multiplication

factor. If we have many dense or random sample points in the basin, we can get a good estimate by simple arithmetical mean. In reality, however, we have only a small number of samples, situated mainly in a plain or along the river or on mountain ridge. They are biased samples from the beginning. So we must multiply some factor to get unbiased estimate for areal precipitation.

7.4. For Bird Creek, we have to assume the seasonal change of multiplying factor α, and after some trials we put α as follows:

$\alpha = 1.3$ from January to May,

$\alpha = 1.0$ from June to August and December,

$\alpha = 0.8$ from September to November.

In Japan, mountain ranges run in the middle of islands like a back bone. In winter, seasonal north-west winds bring heavy snow on the mountainous regions. In analysing the runoff structure of the basins in these snowy regions, we cannot explain the large discharge in spring caused by snowmelt without assuming that the snowfall is much heavier on mountains than on plains. In summer, however, it rains nearly uniformly over the basin. There must be significant seasonal change of multiplication factor α, which cannot be proved by measured data because of the difficulty of snowfall measurement on high mountains. Of course, there is something that is helpful for certifying our assumption. In some basins there are two points, one of the two being situated higher and nearer to the mountain, and by the data of these points some different seasonal patterns of rainfall suggesting our assumption are shown.

Though the usual type of seasonal change shows that α is large in winter and nearly equal to one in summer, there is another type, where α is smaller than 100% in autumn, in addition. This type appears in some valley, lying between mountain ranges on both sides, one on the Sea of

Japan side and the other on the Pacific Ocean side. As we have several examples of this type, we dare assume the above seasonal change of α for Bird Creek.

7.5. For other five rivers, we do not assume the seasonal change of α, but we put it as constant as shown in table 1.

When there is only one rain gauge in the basin at its exit, $\alpha = 1.3$ is a usual value by our experience in Japan.

	α
Wollombi Brook	1.07
Bikin River	1.3
Kitsu River	1.0
Sanaga River	1.1
Nam Mune	1.0

Table 1

8. Obtained results

8.1. The obtained tank models for all the rivers are shown in fig. 12 schematically, where most parameters are written only in the fourth zone. They are for other zones the same as those for the fourth zone, except the capacity of primary soil moisture which is given to each top tank. Table 2 shows other parameters not contained in fig. 12.

8.2. Obtained results are shown in figs. 13 — 18 where real line shows observed discharge and broken line calculated discharge. In these figures, discharge is represented by logarithmic scale, because there are several merits of using logarithmic scale for discharge as follows:

1) The shape of hydrograph becomes better after deformation by logarithmic transformation. It is compressed when discharge is large and is enlarged when discharge is small. So we can see at a glance all the feature of hydrograph from flood to scarce discharge.

2) When the discharge is large, there may be large errors. By using the logarithmic scale, the error is represented in the form of relative error, and we can give better evaluation of errors.

3) If we compare the calculated discharge with the observed one by the normal scale, the evaluation is determined mainly from the parts of hydrograph where discharge is large. But the shape of hydrograph of scarce discharge is also very important. By using the logarithmic scale, we can avoid the above demerit.

4) We can consider approximately that runoff is composed of some components, each of which decreases exponentially with respective time constant, and we construct the tank model for representing this image. With the use of logarithmic scale the hydrograph can represent more clearly the above structure of runoff.

8.3. Though the hydrograph by logarithmic scale has many merits as shown above, it shows demerit when discharge vanishes like the examples of Bird Creek and Wollombi Brook. As logarithm of zero is negative infinity, hydrograph is enlarged too much when discharge becomes very small. To avoid this defect, we add some small positive constant q_o to discharge q, and the hydrograph is plotted by $\log(q + q_o)$, where we use $q_o = 10^{-3}$ (mm/day) for Bird Creek and $q_o = 10^{-2}$ (mm/day) for Wollombi Brook. This scale is used in figs. 13 and 14.

8.4. For the runoff analysis of Kitsu River, it is necessary to consider the effect of irrigation for paddy fields. In most of Japanese river basins, a large amount of water is taken for irrigation of paddy fields, which partly returns back to the river soon after but partly infiltrates and turns into groundwater. In runoff analysis, we may neglect the former in first approximation, but we cannot neglect the latter which gives significant effect to base discharge. For the calculation of this effect, we usually subtract some amount from the output of tank model for irrigation of paddy fields and feed back it to the third tank of the tank model as is shown in fig. 19. The amount of

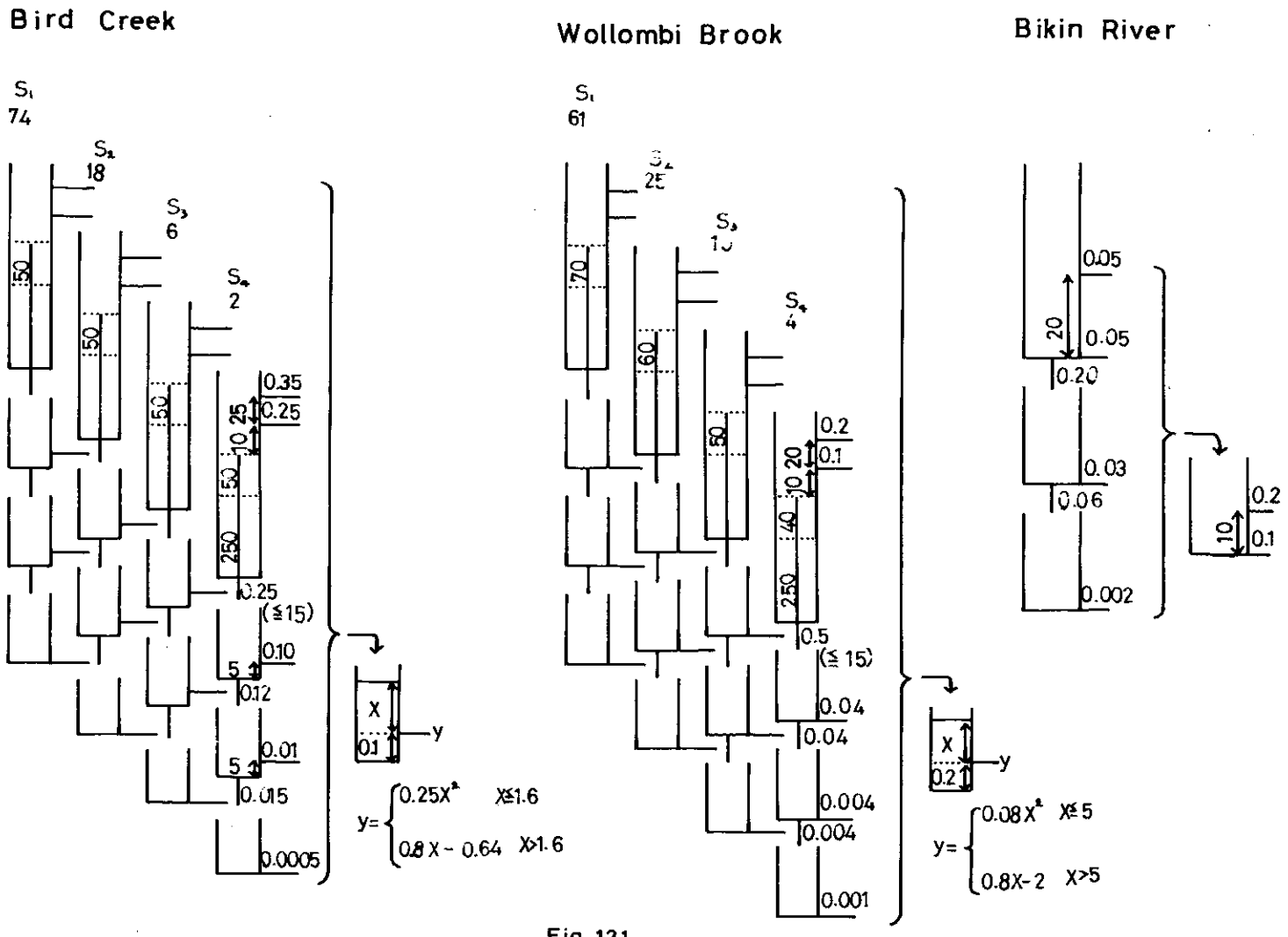
Bird Creek
Wollombi Brook
Bikin River
$y = \begin{cases} 0.25X^2 & X \leq 1.6 \\ 0.8X - 0.64 & X > 1.6 \end{cases}$
$y = \begin{cases} 0.08X^2 & X \leq 5 \\ 0.8X - 2 & X > 5 \end{cases}$

Fig. 12-1

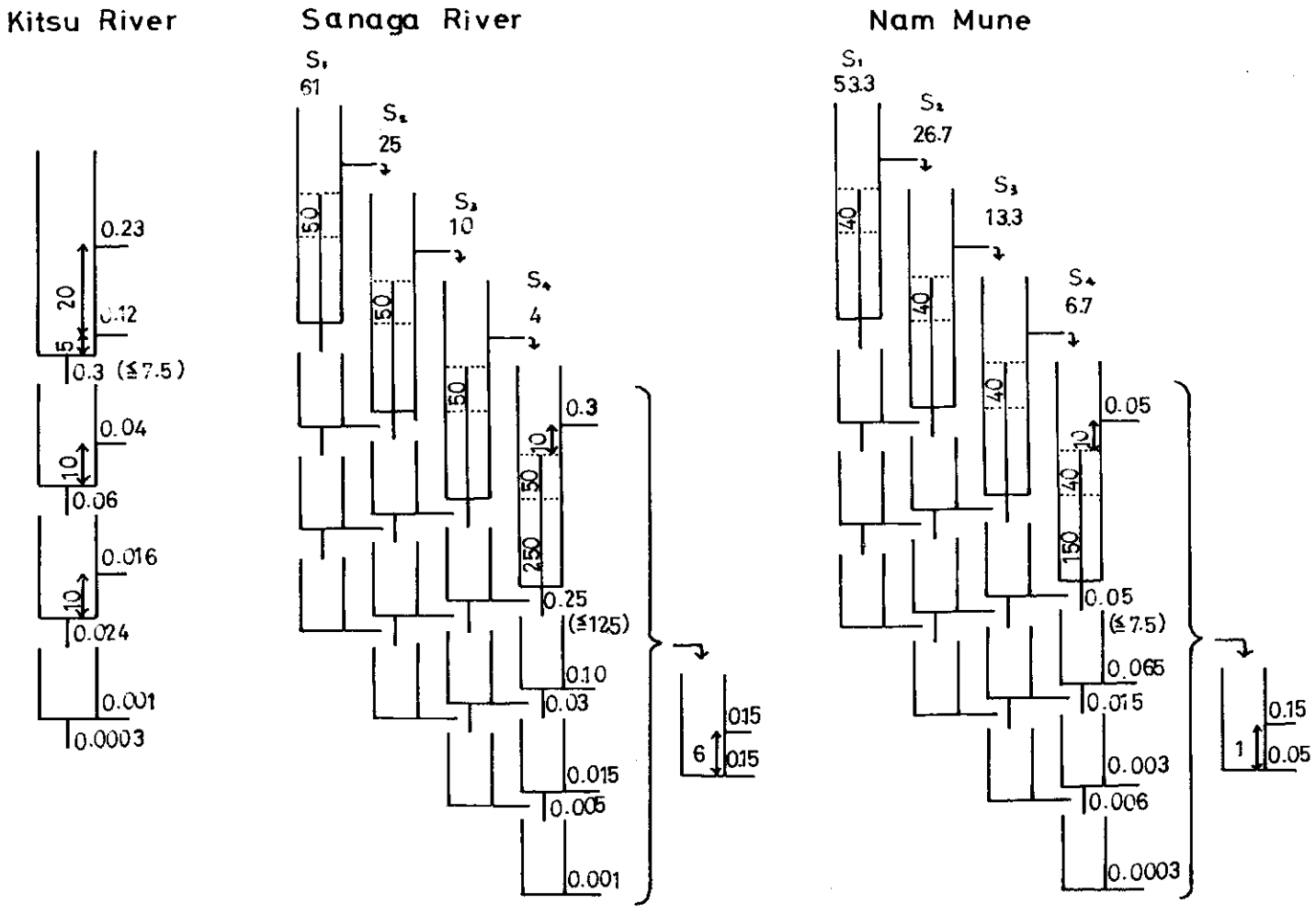
Kitsu River
Sanaga River
Nam Mune
S1
61
S2
25
S3
10
S4
4
S1
53.3
S2
26.7
S3
13.3
S4
6.7
0.23
0.12
0.3 (≦7.5)
0.04
0.06
0.016
0.024
0.001
0.0003
0.3
0.25
(≦125)
0.10
0.03
0.015
0.005
0.001
0.15
0.15
0.05
0.05
(≦7.5)
0.065
0.015
0.003
0.006
0.0003
0.15
0.05

Fig. 12-2

		Catchment area (km^2)	Mean precipitation	Multiplication factor α for basin precipitation
Bird Creek	Near Sperry, Oklahoma, U.S.A.	2,344	given	1.3 Jan. - May 1.0 June - Aug. & Dec. 0.8 Sep. - Nov.
Wollombi Brook	New South Wales Australia, Tributary of Hunter Valley	1,592	given	1.07
Bikin River	East Siberia, U.S.S.R.	13,100	only one point	1.3
Kitsu River	Kyoto, Mie, Nara Prefecture, Japan, Tributary of Yodo River	1,456	simple arithmetic mean	1.0
Sanaga River	Cameroon	131,500	weighted mean, where weight is 1 for 9 points inside the basin and 1/2 for 4 points on the boundary of outside of the basin	1.1
Nam Mune	Thailand, Tributary of Mekong	104,000	weighted mean, where weight is 1 for Roiet and Surin, and 1/2 for Korat and Khon Kaen	1.0

Table 2.1

	Evapotranspiration (E is daily evaporation measured by evaporimeter)	Transfer from primary soil moisture to secondary soil moisture $T_2 = c_o + c(1 - X_s/C_s)$	Transfer from lower free water to primary soil moisture $T_1 = b_o + b(1 - X_p/C_p)$
Bird Creek	0.8 E from free water of the top tank or 0.6 E from soil moisture	$c_o = 0.5$, $c = 1.0$	$b_o = 3$, $b = 3$
Wollombi Brook	0.9 E from free water of the top tank or 0.7 E from soil moisture	$c_o = 0.5$, $c = 1.0$	$b_o = 3$, $b = 3$
Bikin River	$E = (0.1 + 0.4u)(e_s - e)$ where u is mean wind velocity and $e_s - e$ is saturation deficit of air moisture	——	——
Kitsu River	Jan. Feb. Mar. Apr. May Jun. E 1.3 1.6 2.3 3.4 4.0 4.2 Jul. Aug. Sep. Oct. Nov. Dec. E 5.0 5.6 4.0 2.7 1.9 1.3 (mm) E is subtracted when mean precipitation is less than 1 mm/day	——	——
Sanaga River	4.8 mm/day from free water of the top tank or 3.6 mm/day from soil moisture	$c_o = 0.5$, $c = 1.0$	$b_o = 3$, $b = 3$
Nam Mune	0.8 E from free water of the top tank or 0.6 E from soil moisture	$c_o = 0.5$, $c = 0.5$	$b_o = 3$, $b = 3$

Table 2.2

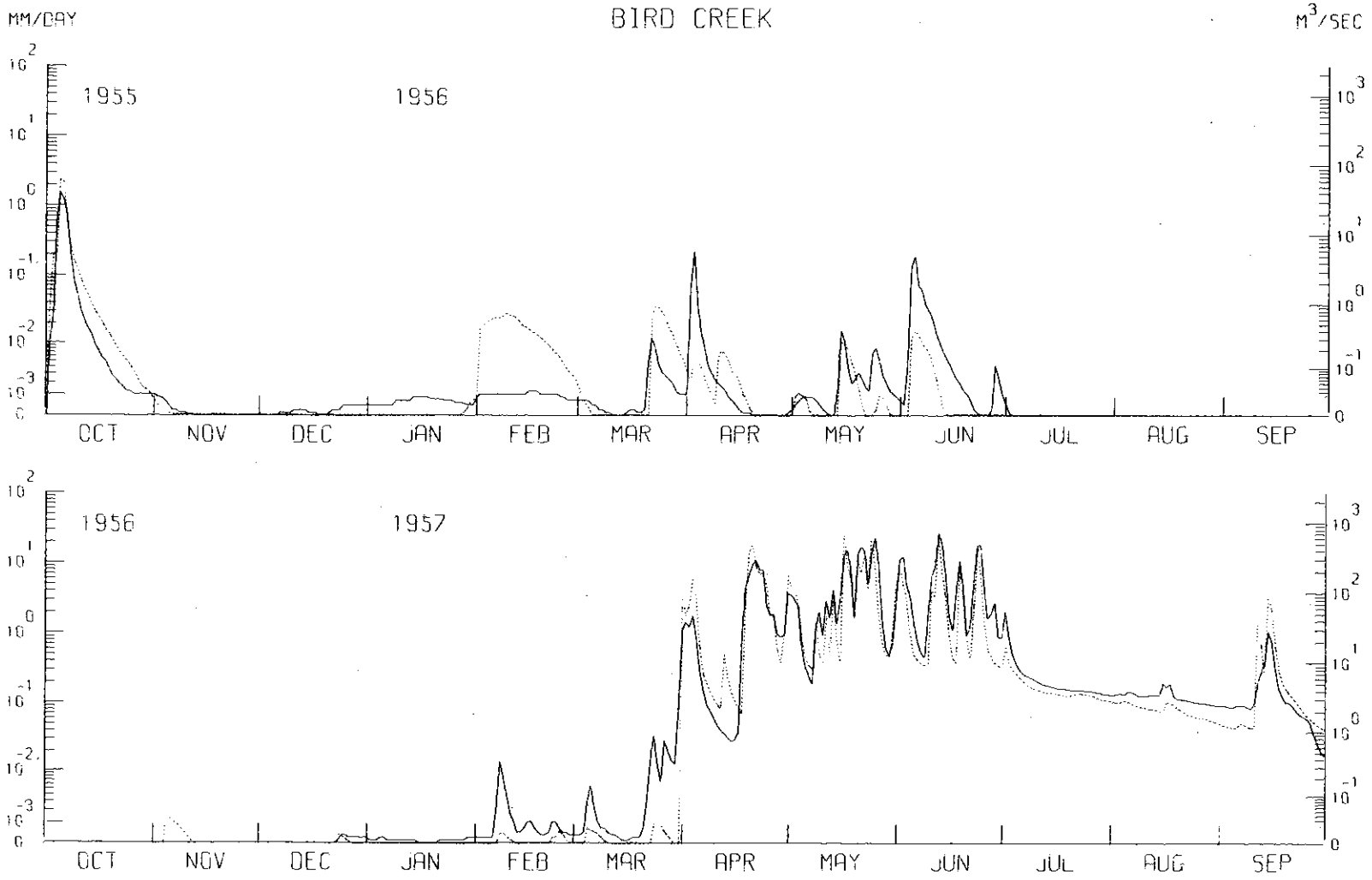
BIRD CREEK
MM/DAY
M3/SEC
1955
1956
1956
1957
OCT
NOV
DEC
JAN
FEB
MAR
APR
MAY
JUN
JUL
AUG
SEP

Fig. 13.1

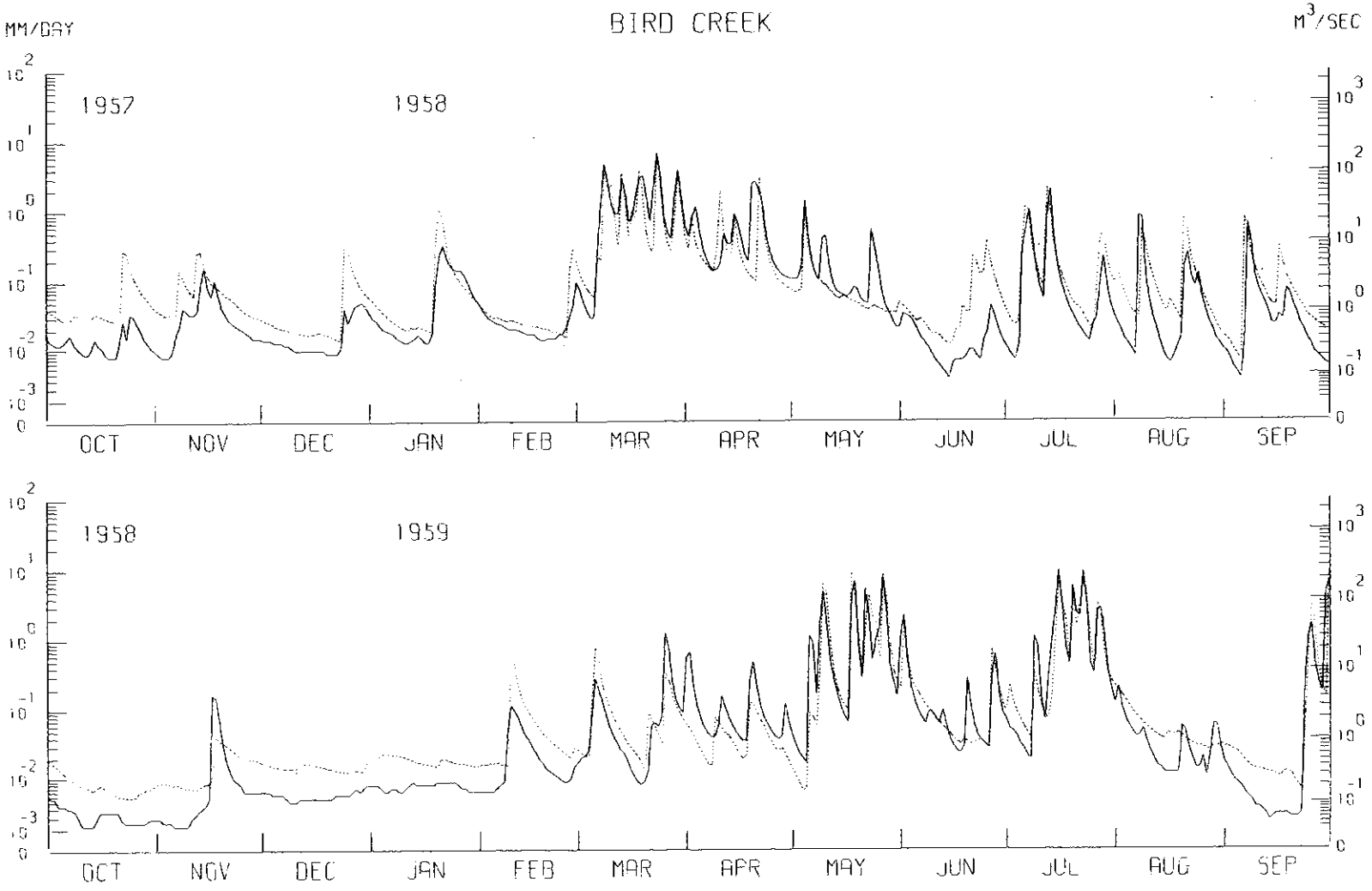
BIRD CREEK
MM/DAY
M3/SEC
1957
1958
1958
1959
OCT
NOV
DEC
JAN
FEB
MAR
APR
MAY
JUN
JUL
AUG
SEP

Fig. 13.2

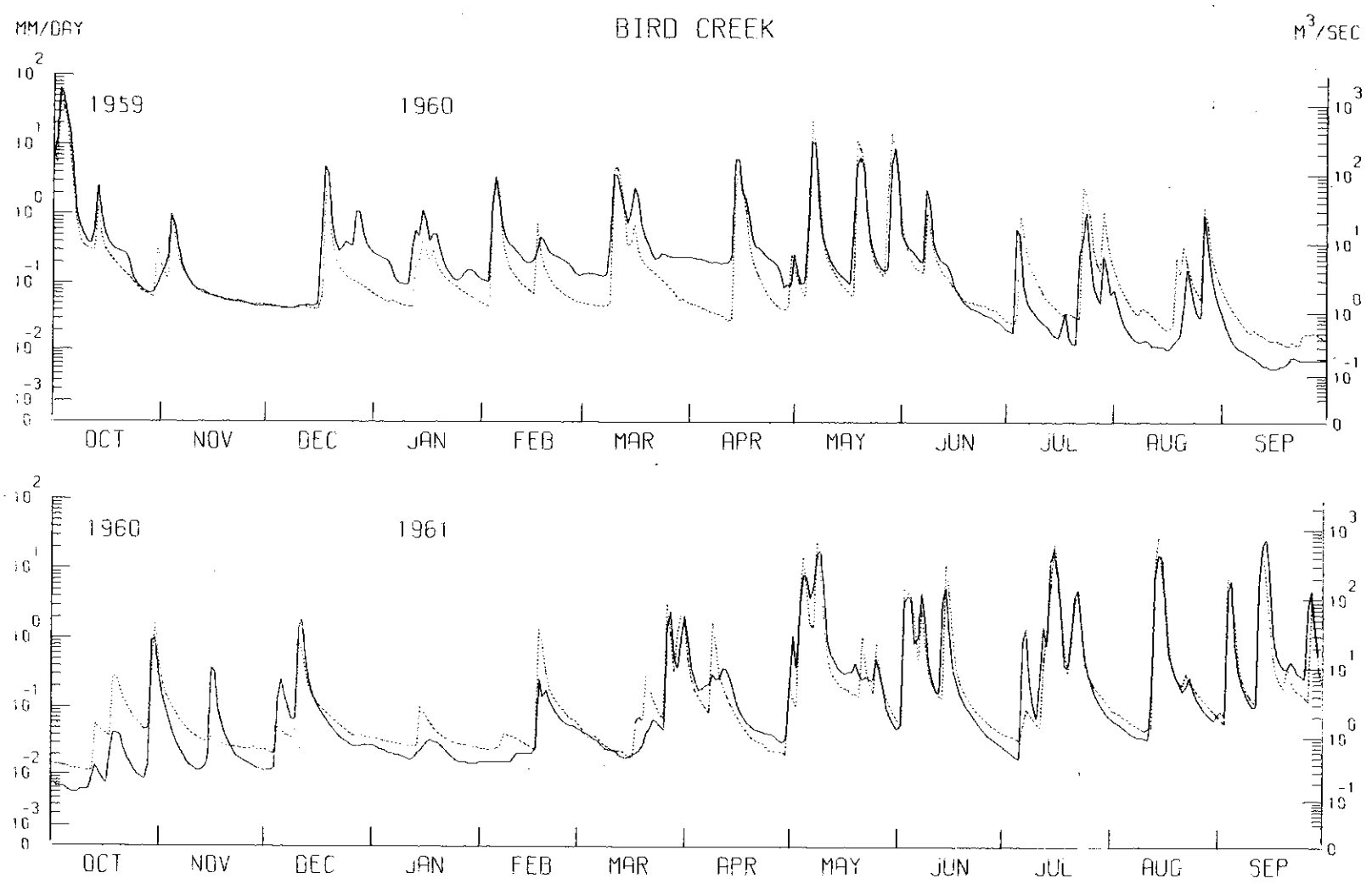
BIRD CREEK
MM/DAY
M3/SEC
1959
1960
1960
1961
OCT
NOV
DEC
JAN
FEB
MAR
APR
MAY
JUN
JUL
AUG
SEP

Fig. 13.3

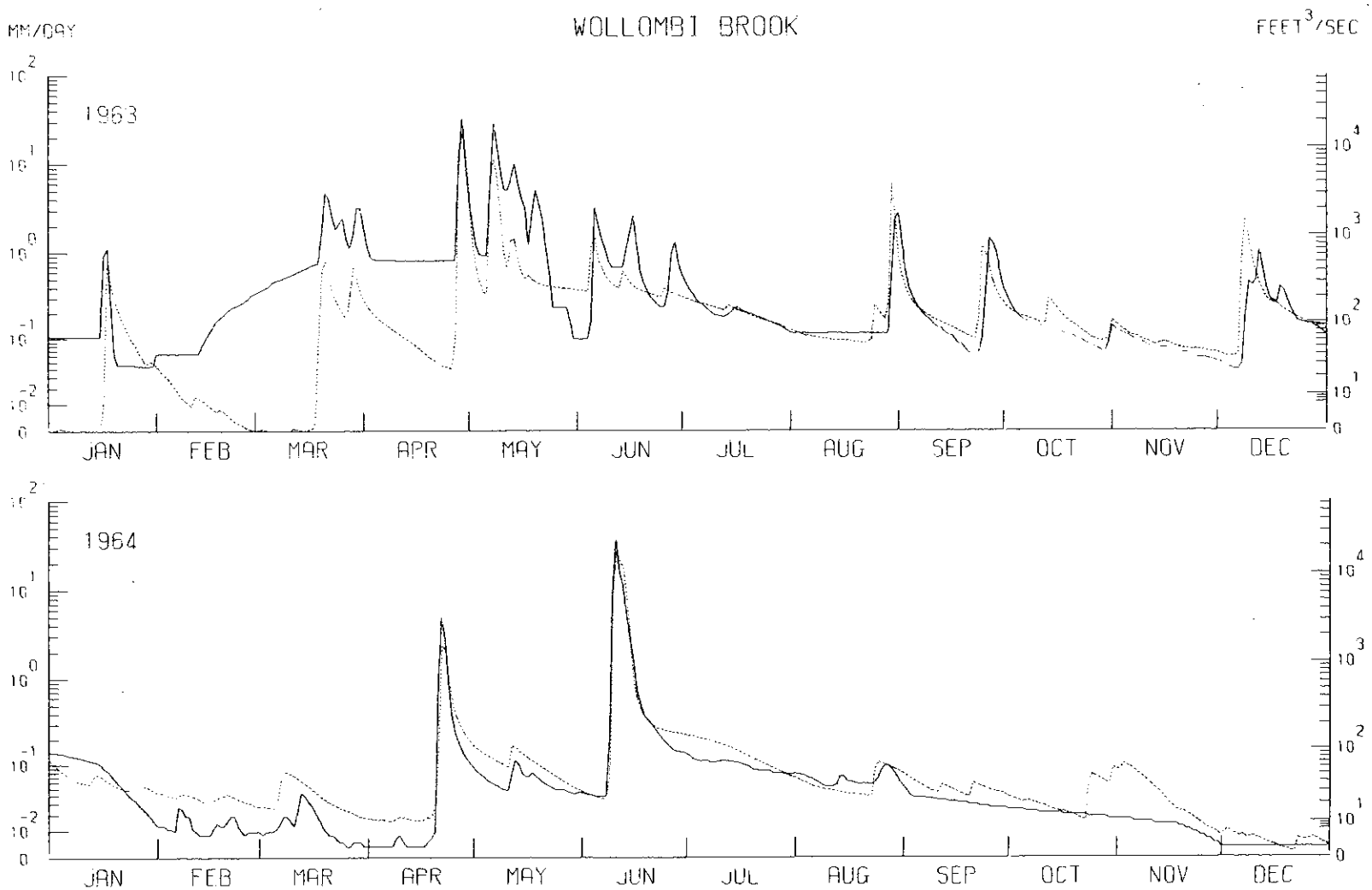
WOLLOMBI BROOK
MM/DAY
FEET^3/SEC
1963
1964
JAN
FEB
MAR
APR
MAY
JUN
JUL
AUG
SEP
OCT
NOV
DEC

Fig. 14.1

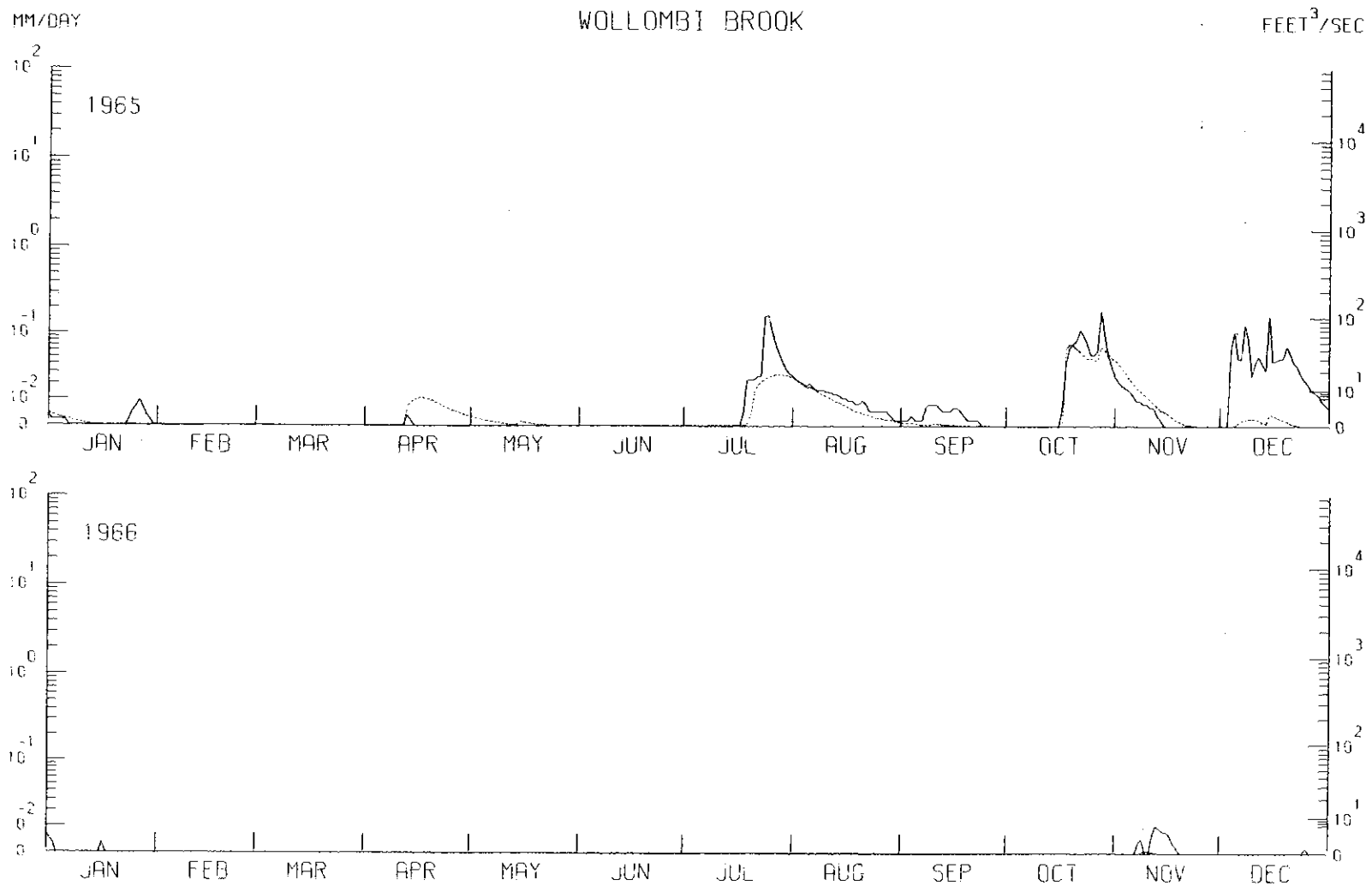
WOLLOMBI BROOK
MM/DAY
FEET³/SEC
1965
1966
JAN
FEB
MAR
APR
MAY
JUN
JUL
AUG
SEP
OCT
NOV
DEC

Fig. 14.2

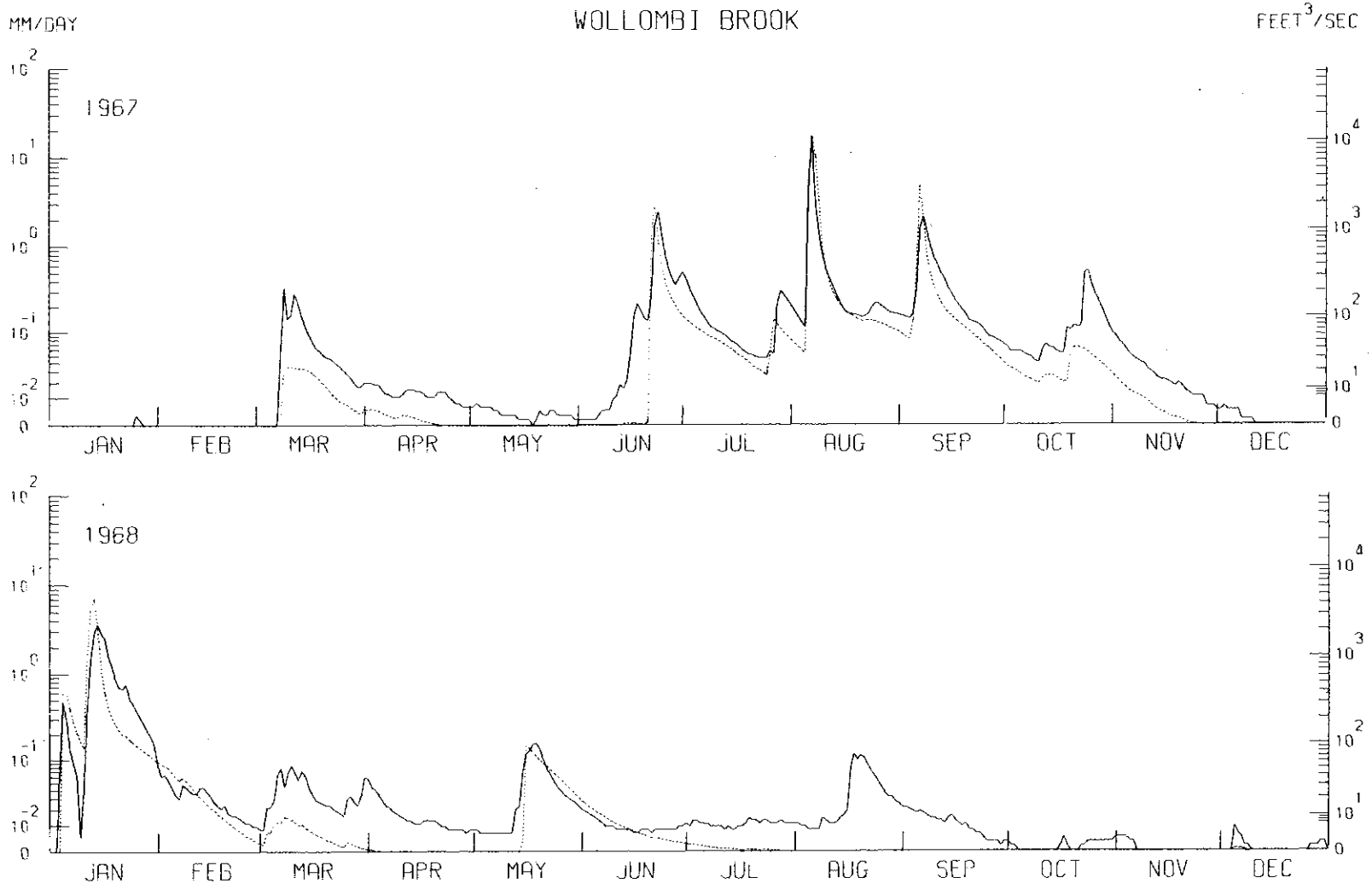
WOLLOMBI BROOK
MM/DAY
FEET^3/SEC
1967
1968
JAN
FEB
MAR
APR
MAY
JUN
JUL
AUG
SEP
OCT
NOV
DEC

Fig. 14.3

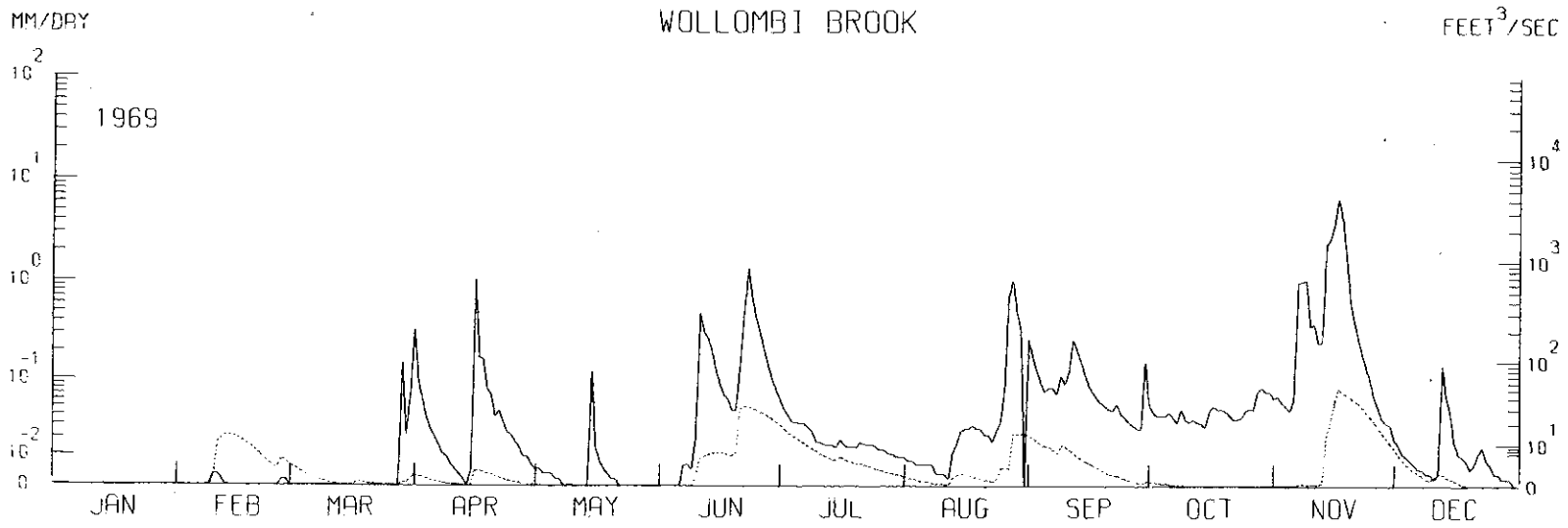
WOLLOMBI BROOK
MM/DAY
FEET^3/SEC
1969
10^2
10^1
10^0
10^{-1}
10^{-2}
0
10^4
10^3
10^2
10^1
0
JAN
FEB
MAR
APR
MAY
JUN
JUL
AUG
SEP
OCT
NOV
DEC

Fig. 14.4

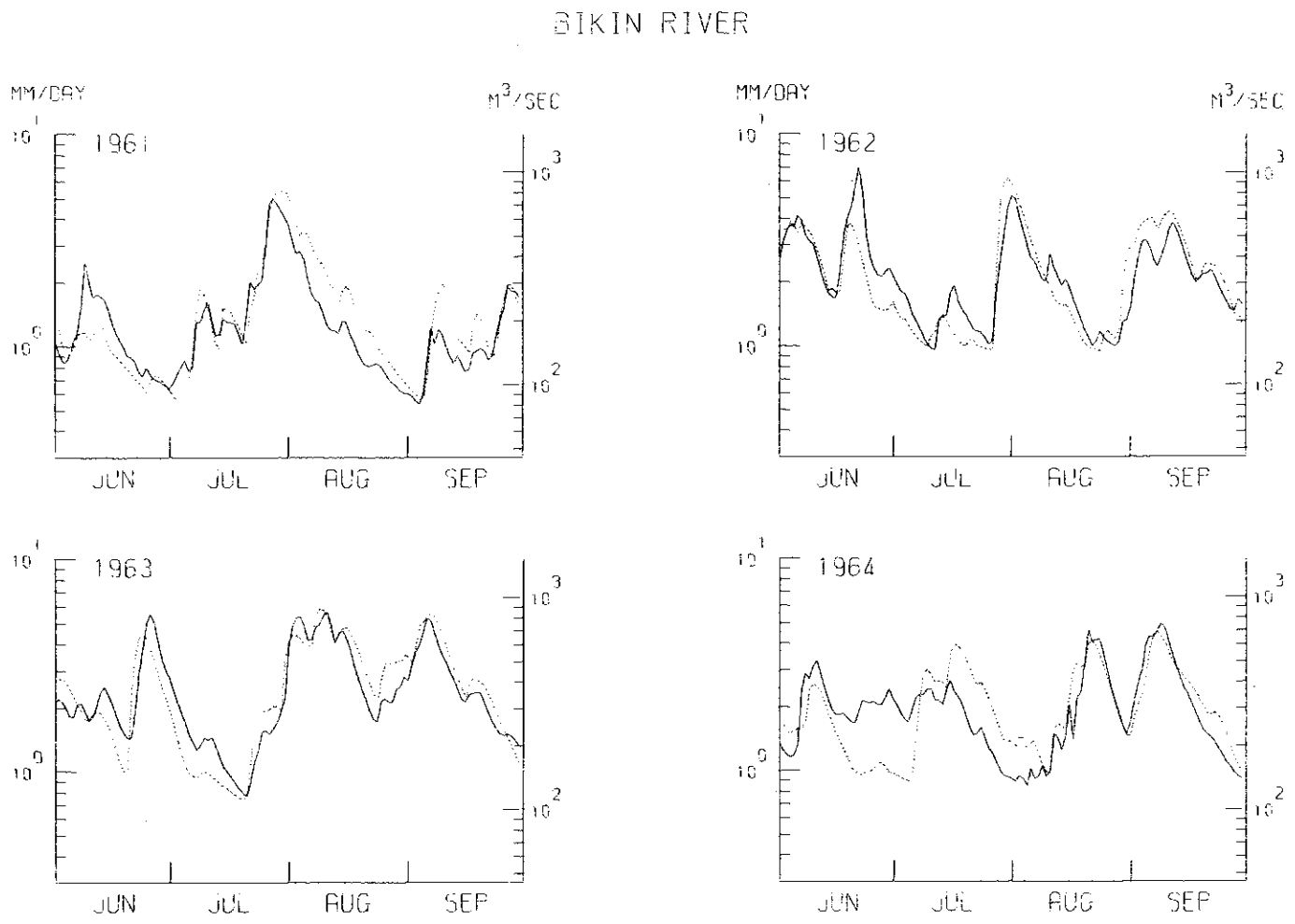

Fig. 15.1

BIKIN RIVER

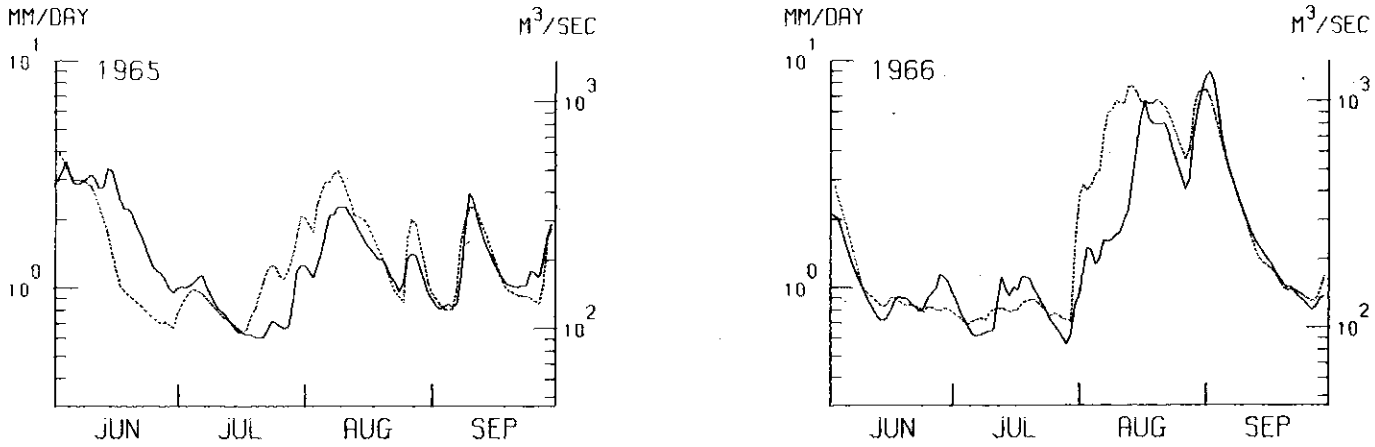

Fig.15.2

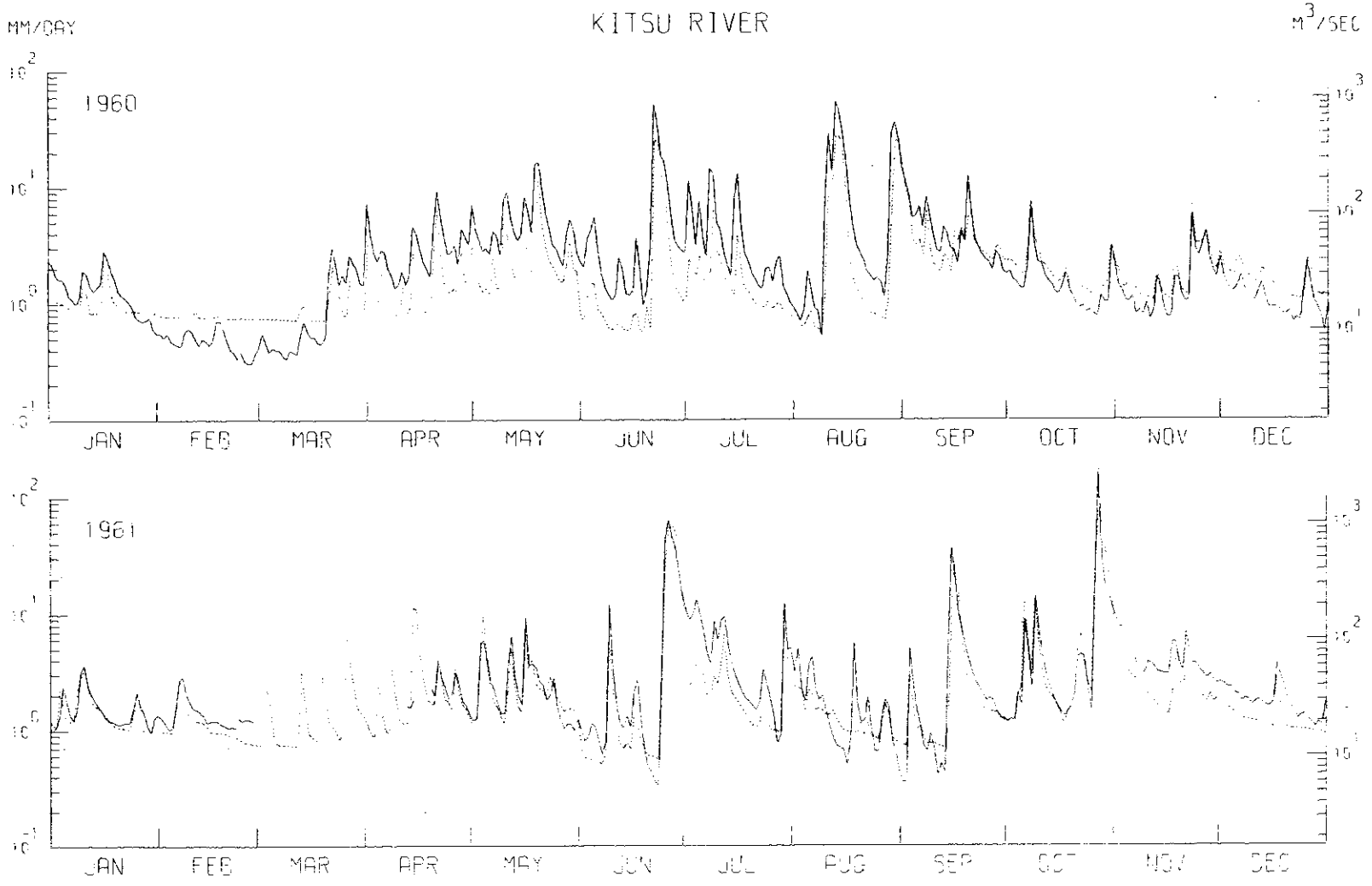
KITSU RIVER
MM/DAY
M3/SEC
1960
1961
JAN
FEB
MAR
APR
MAY
JUN
JUL
AUG
SEP
OCT
NOV
DEC

Fig. 16.1

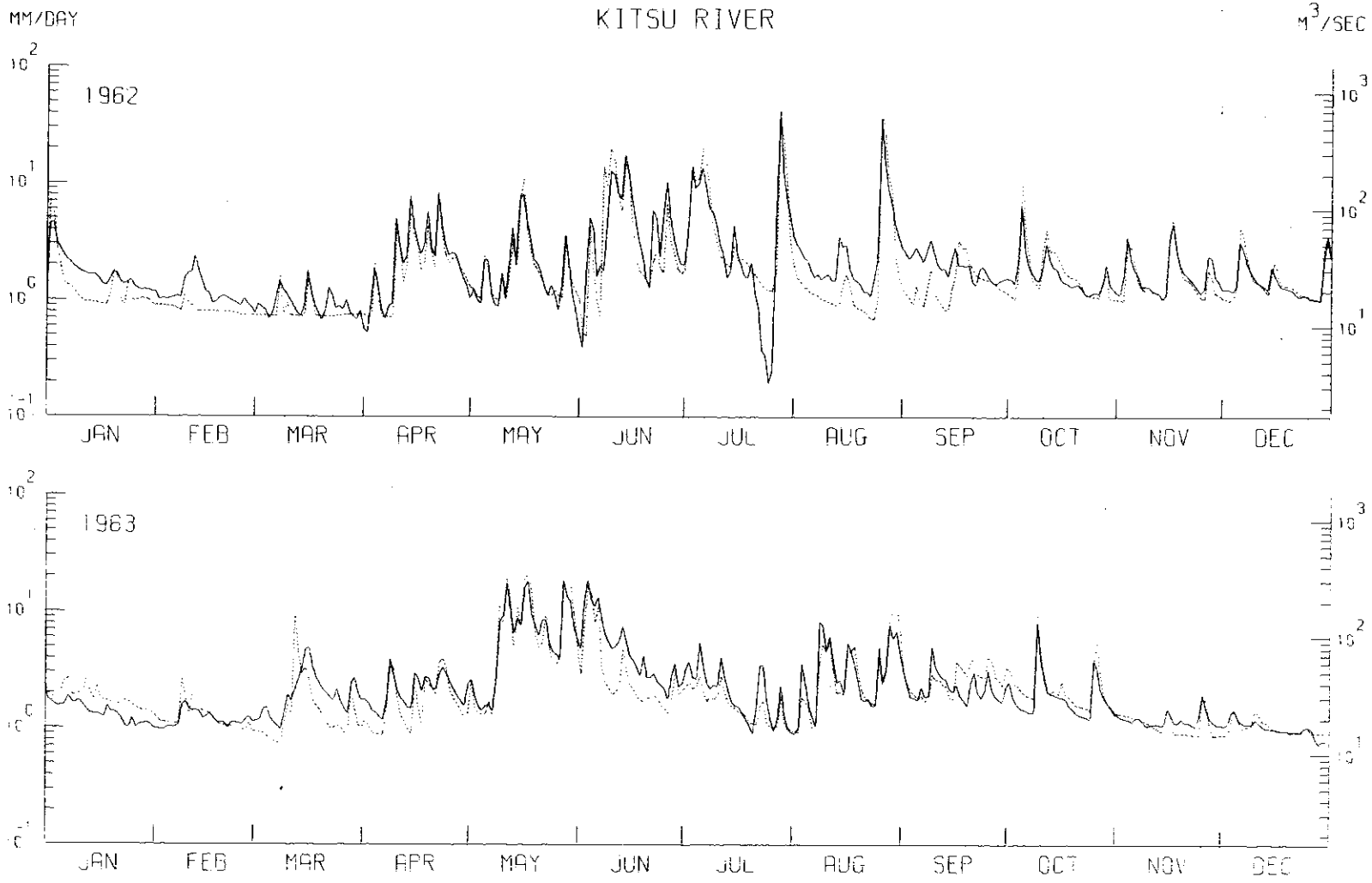
KITSU RIVER
MM/DAY
M3/SEC
1962
1963
JAN
FEB
MAR
APR
MAY
JUN
JUL
AUG
SEP
OCT
NOV
DEC

Fig. 16. 2

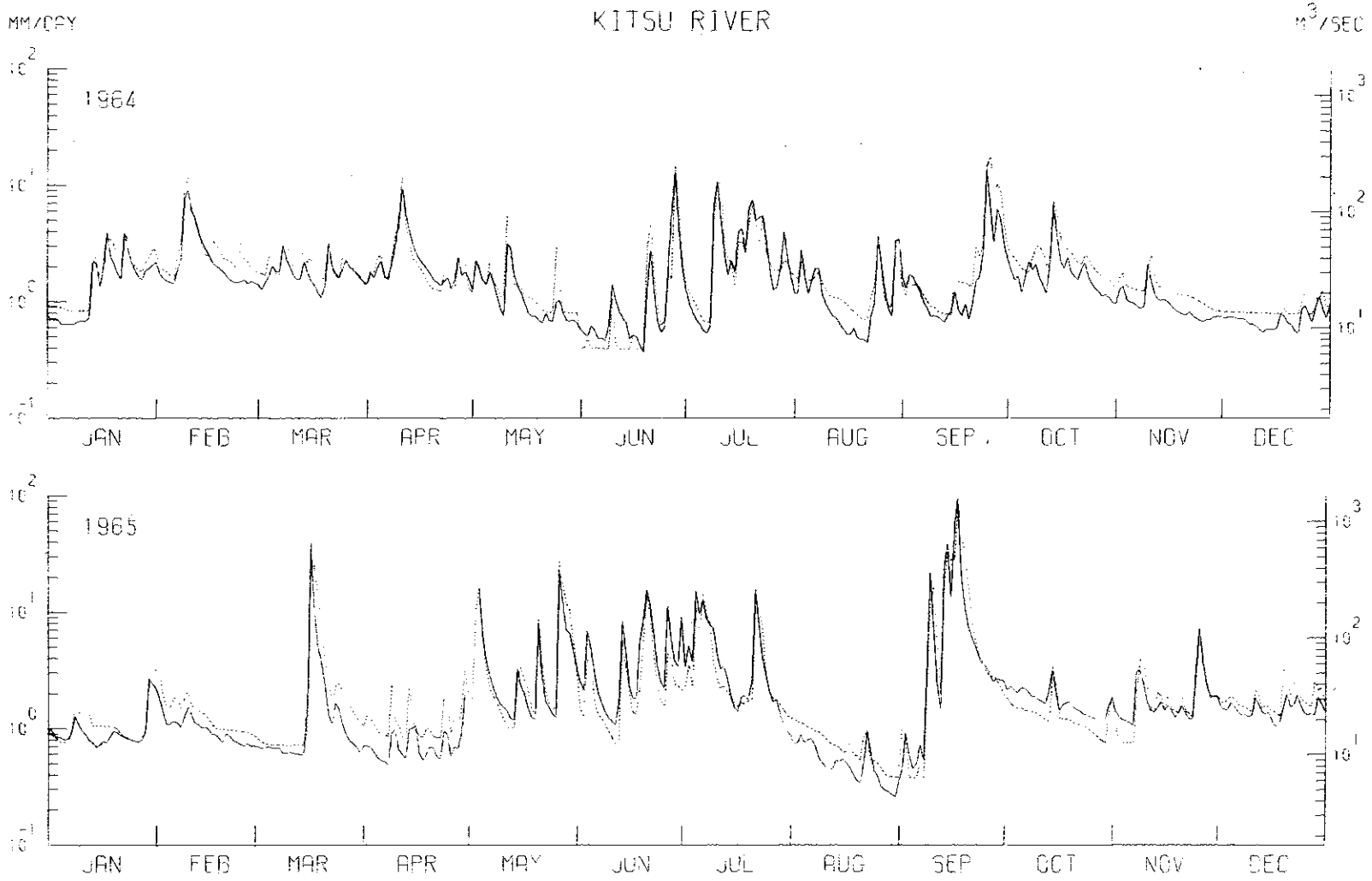
KITSU RIVER
MM/DAY
M3/SEC
1964
1965
JAN
FEB
MAR
APR
MAY
JUN
JUL
AUG
SEP
OCT
NOV
DEC

Fig. 16. 3

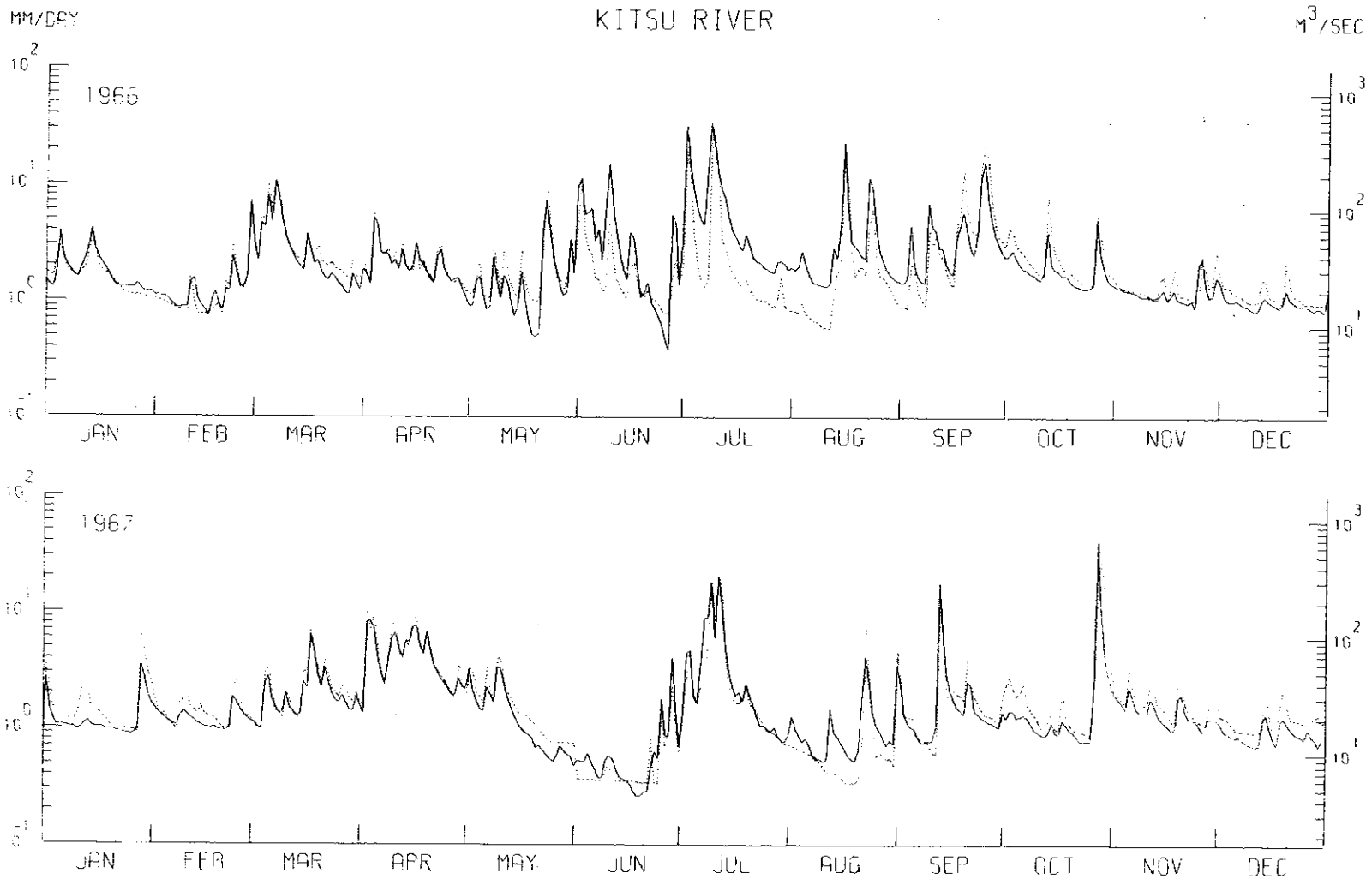
KITSU RIVER
MM/DAY
M3/SEC
1966
1967
JAN
FEB
MAR
APR
MAY
JUN
JUL
AUG
SEP
OCT
NOV
DEC

Fig. 16. 4

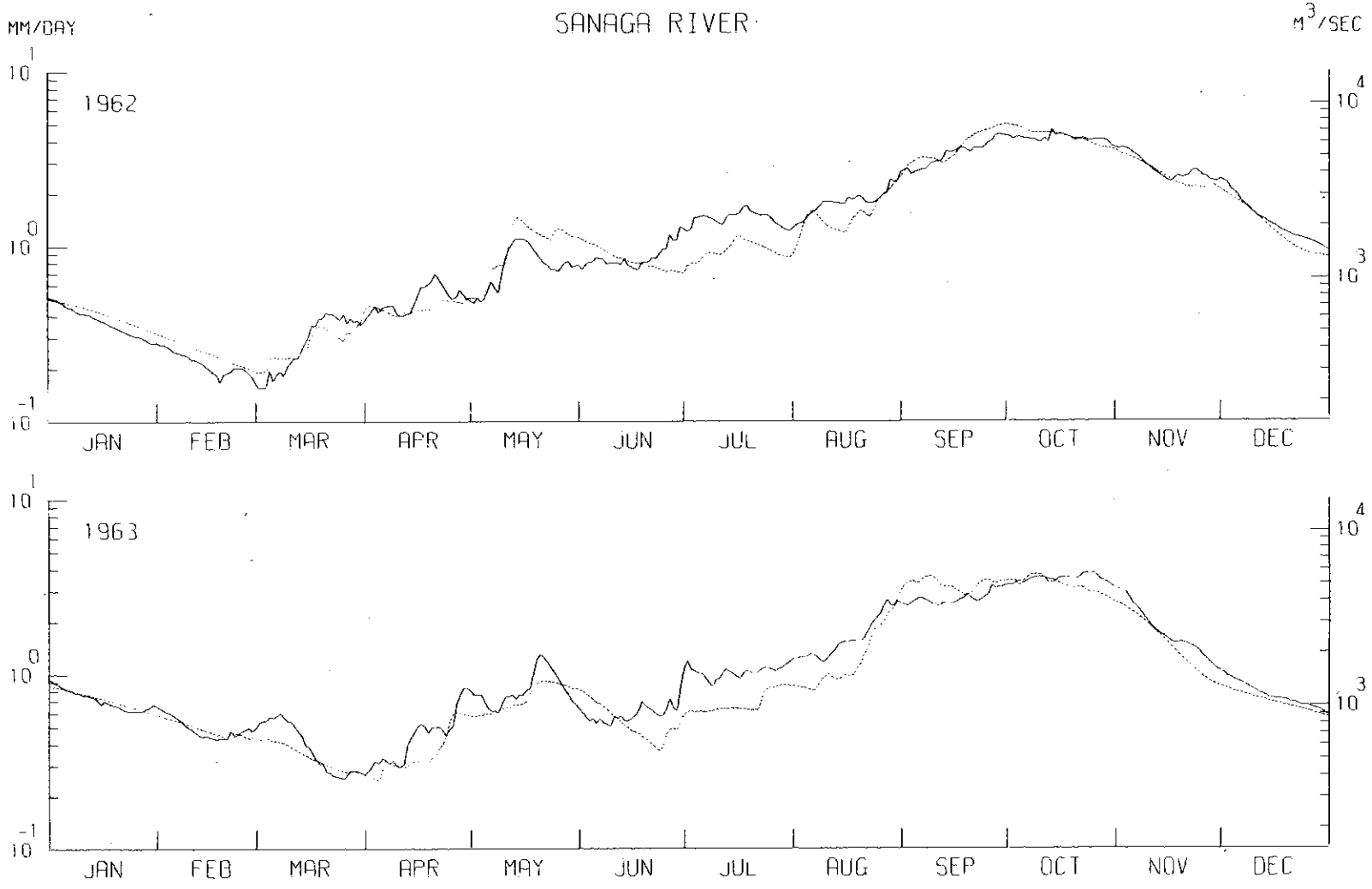
SANAGA RIVER
MM/DAY
M3/SEC
1962
1963
10^1
10^0
10^-1
10^4
10^3
JAN
FEB
MAR
APR
MAY
JUN
JUL
AUG
SEP
OCT
NOV
DEC

Fig. 17.1

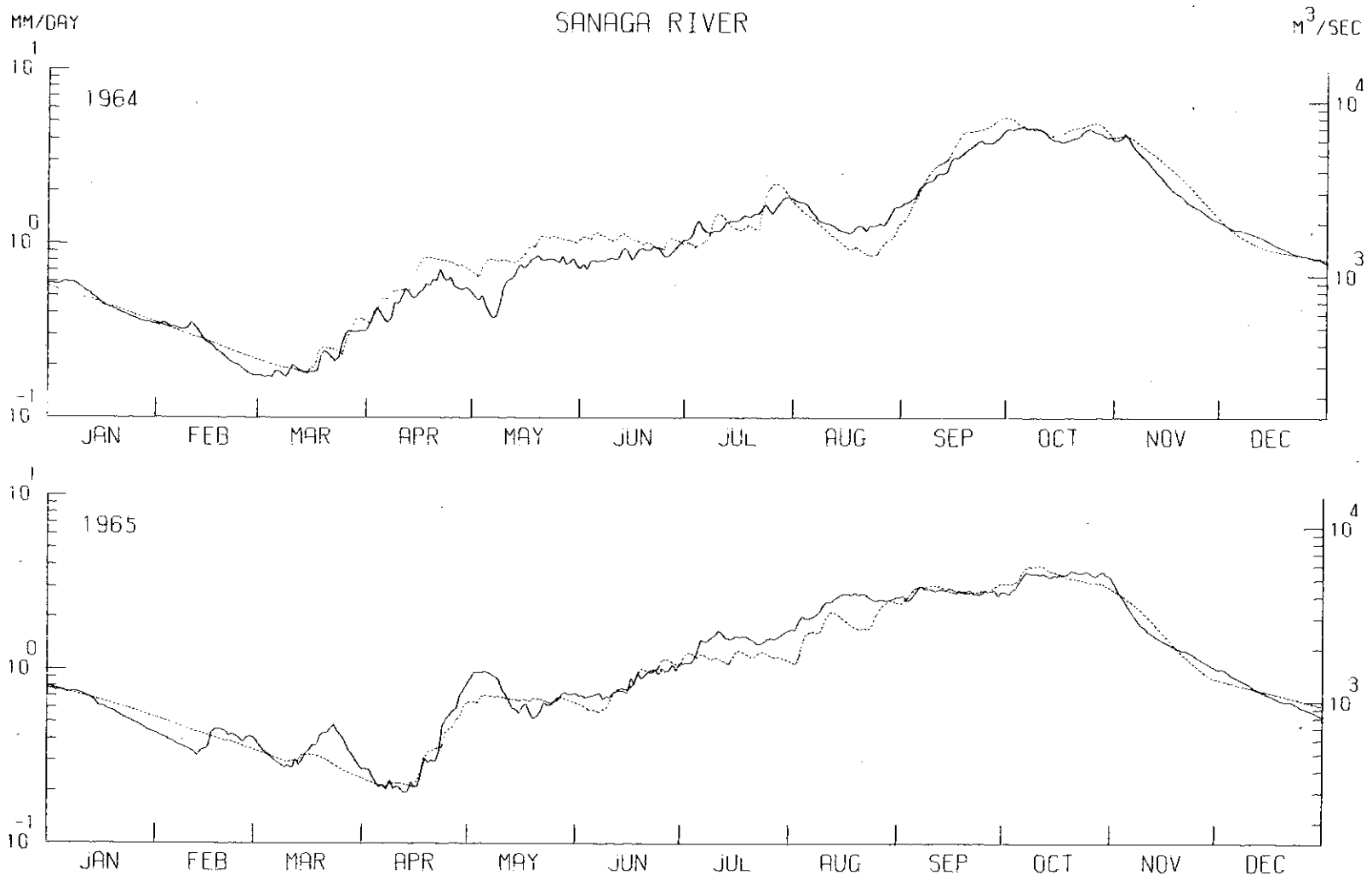
SANAGA RIVER
MM/DAY
M3/SEC
1964
1965
10^1
10^0
10^-1
10^4
10^3
JAN
FEB
MAR
APR
MAY
JUN
JUL
AUG
SEP
OCT
NOV
DEC

Fig. 17. 2

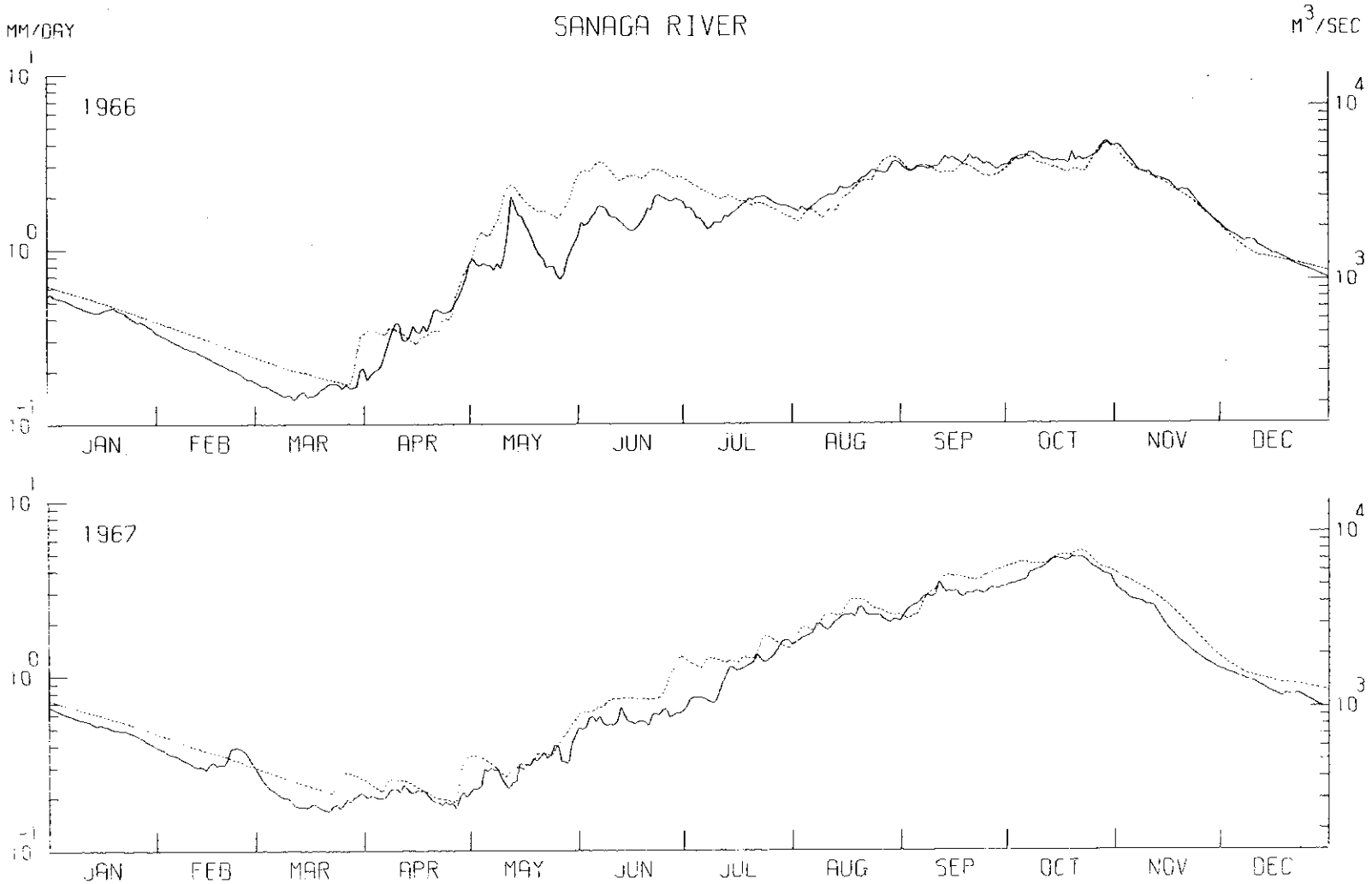
SANAGA RIVER
MM/DAY
M3/SEC
1966
1967
JAN
FEB
MAR
APR
MAY
JUN
JUL
AUG
SEP
OCT
NOV
DEC

Fig. 17. 3

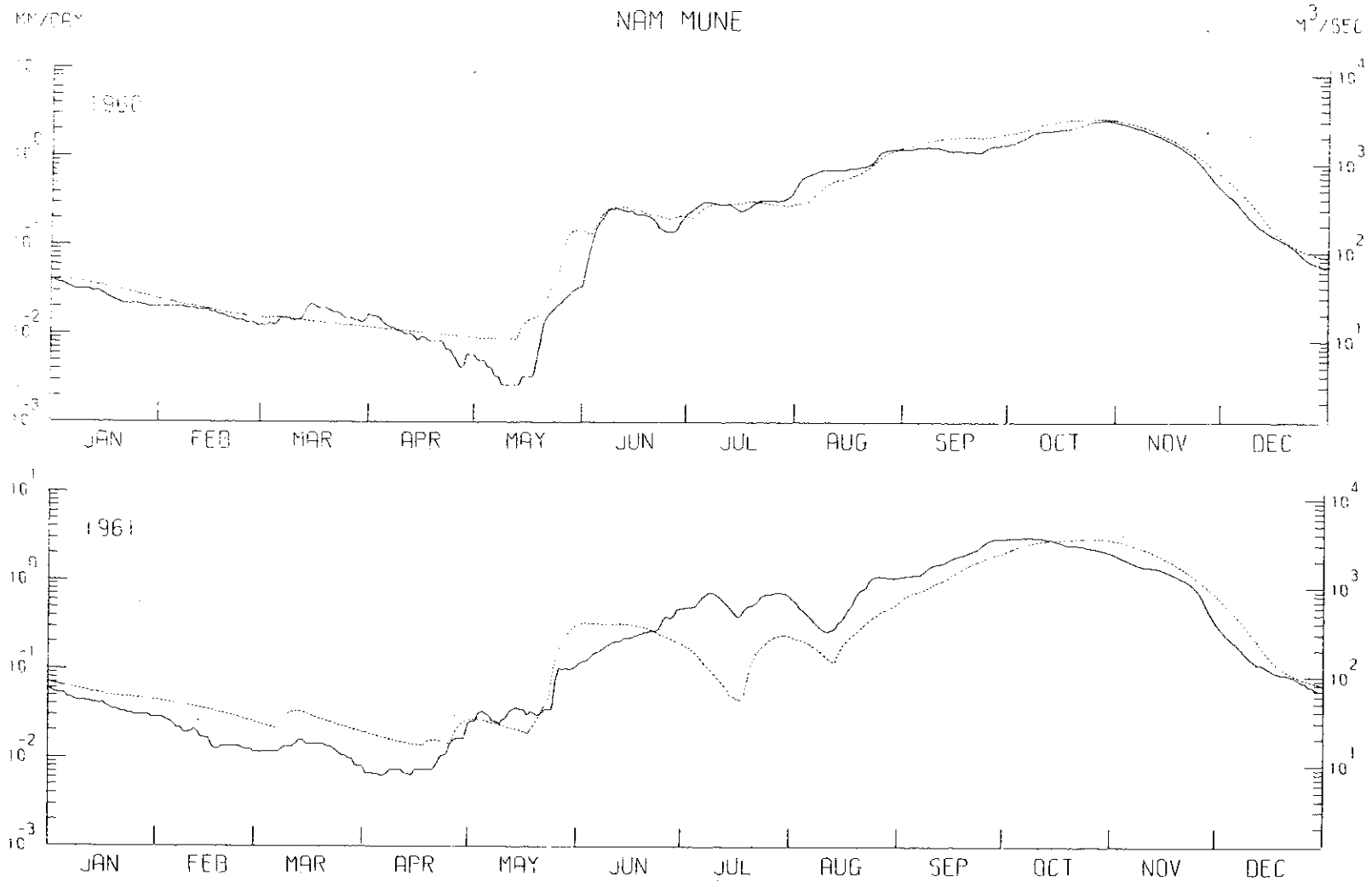
NAM MUNE
M3/SEC
1960
1961
JAN
FEB
MAR
APR
MAY
JUN
JUL
AUG
SEP
OCT
NOV
DEC

Fig. 18.1

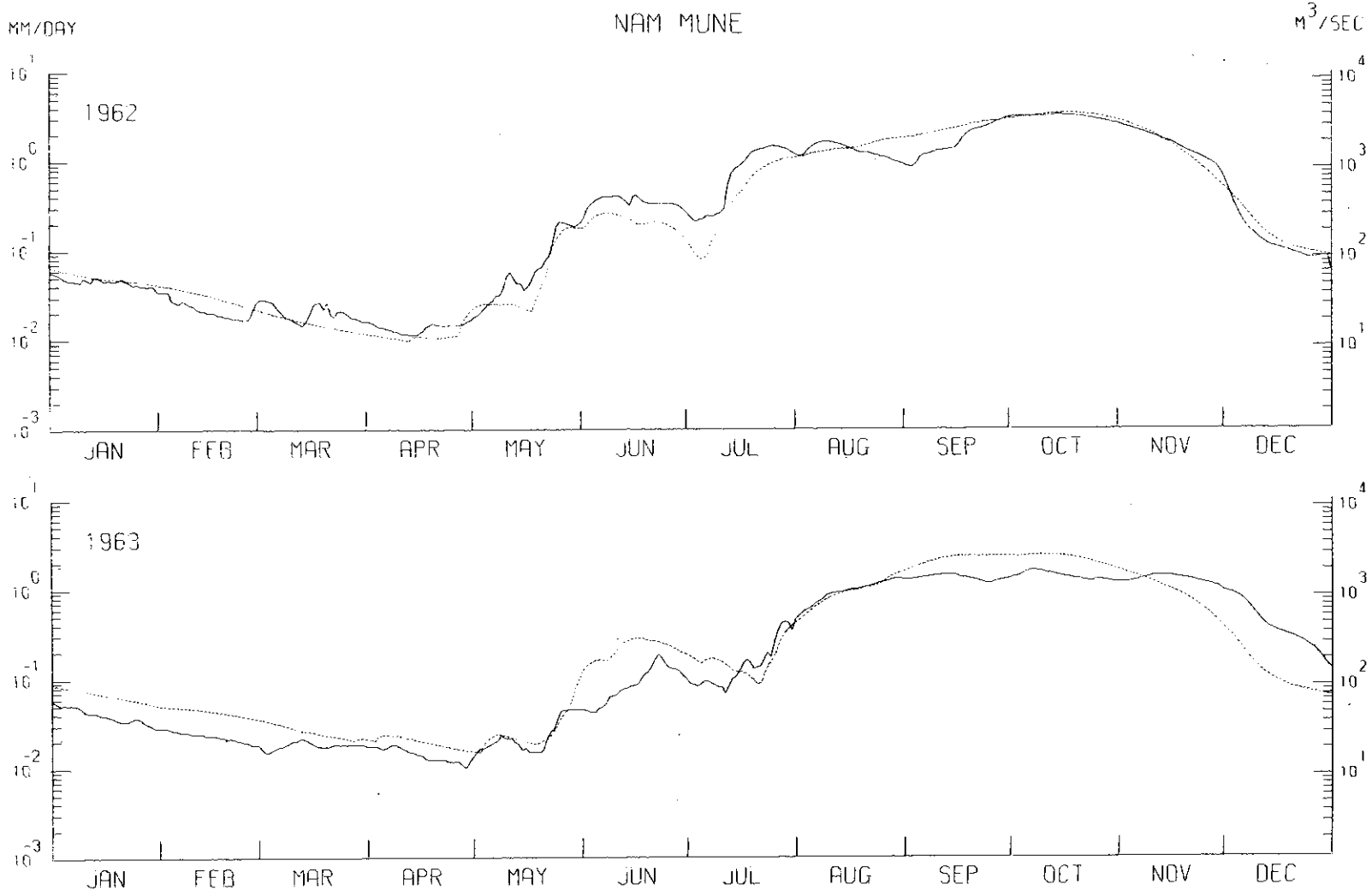
NAM MUNE
MM/DAY
M3/SEC
1962
1963
JAN
FEB
MAR
APR
MAY
JUN
JUL
AUG
SEP
OCT
NOV
DEC

Fig. 18. 2

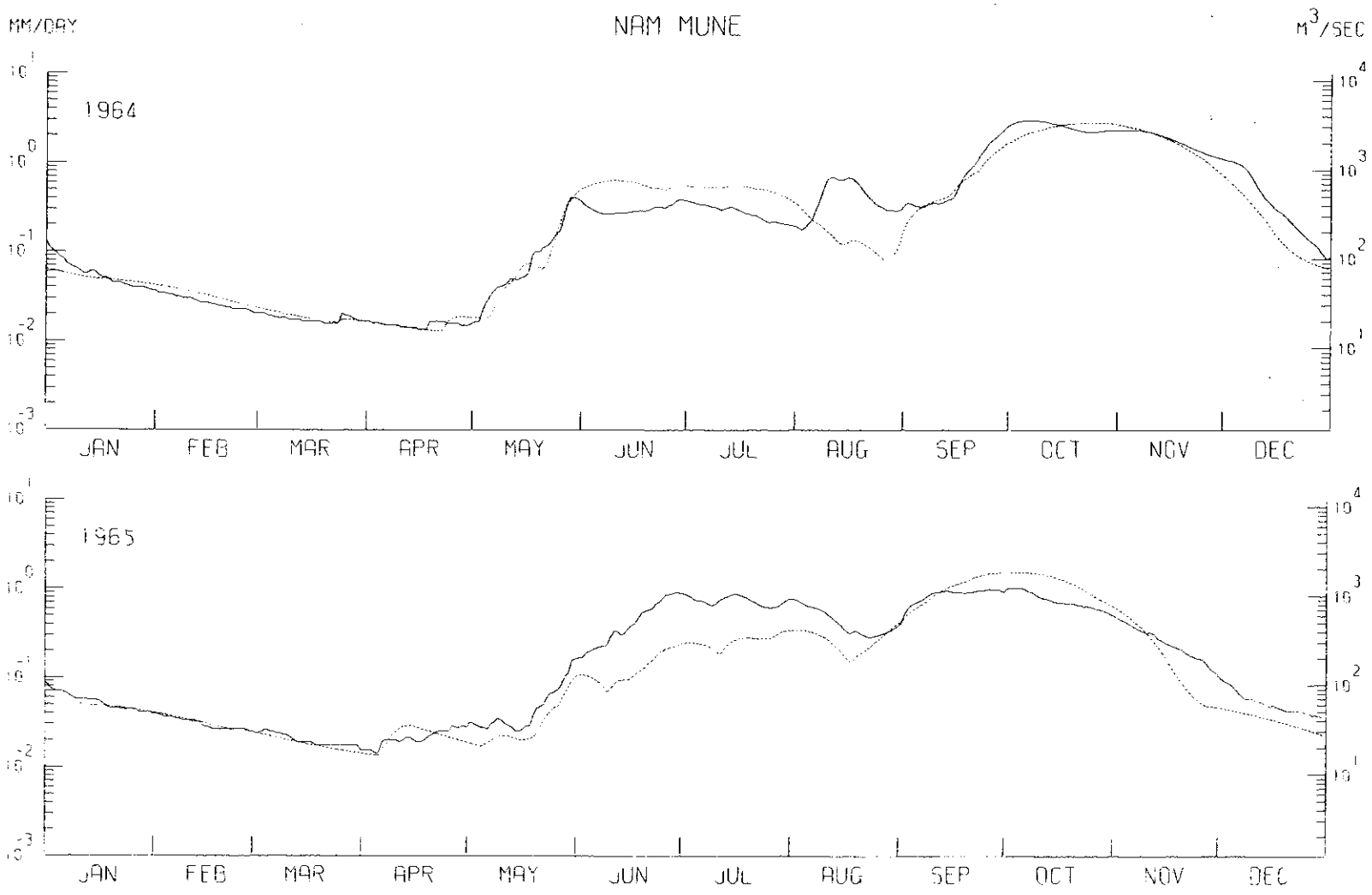
NAM MUNE
MM/DAY
M3/SEC
1964
1965
JAN
FEB
MAR
APR
MAY
JUN
JUL
AUG
SEP
OCT
NOV
DEC

Fig. 18. 3

irrigation water is determined by trials and errors. In most rivers, it is known, what amount of water is taken for irrigation, but we cannot know, how much water returns to the river soon after and how much water turns into groundwater. So we must iterate trials. Unfortunately, however, this simple method is useless for Kitsu River. There may be more complicated conditions.

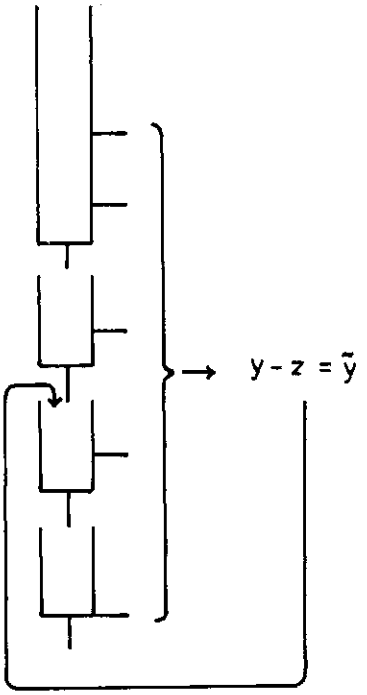

Fig. 19

8.5. About fifteen years ago, Sugawara and Katsuyama analysed the runoff structure of Nabari River, a tributary of Kitsu River, whose catchment area is about a half of that of Kitsu River. In the basin of Nabari River there are paddy fields, where the rate of infiltration is extraordinary larger than usual as table 3 shows, while rate of infiltration from paddy fields is usually 10 - 20 mm/day.

infiltration rate (mm/day)	
0 - 10	20%
10 - 50	40%
50 - 100	30%
100 -	10%

Table 3

Formerly, we assumed that all paddy fields consume water 50 mm/day, approximate average of table 3. Then the water supply to these paddy fields must be too much to be taken from the river when discharge is small, though usual Japanese rivers have very large stational base discharge compared with other countries. They are usually about 1 mm/day and some rivers in volcanic region have the base discharge of about

2 - 3 mm/day.

Curiously, however, there remains not small discharge in Nabari River even at the time of scarce discharge. So we have to consider, there must be some restrictions that prevent to take all discharge from river. For the main reason, we suppose that entrance gates of canals which lead to paddy fields are situated on upper streams, so that catchment area for these gates is not large, which is estimated about half of the total basin.

When discharge is small, the half of discharge cannot satisfy the water demand of paddy fields but it is enough for rice plant to live. And if there is enough discharge, paddy fields will satisfy their full demand. So water supply to paddy fields must be variable, depending partly on discharge and partly on demand on paddy fields which are better to be covered with water of 100 mm in depth.

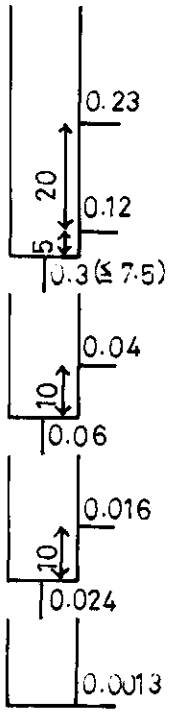

Fig. 20

Using the above rule for water supply to paddy fields, we get the runoff structure of Nabari River shown in fig. 20.

6.6. For the runoff analysis of Kitsu River this time, we modify the former assumption by assuming that there are four kinds of paddy fields, each having its own infiltration rate as table 4 shows, and we calculate the effect of paddy fields under the scheme shown in fig. 21, using the former runoff structure of fig. 20. We find, we will be able to get fairly good result with small modification of the fourth tank. Kitsu River at Kamo may have subsurface discharge flowing through sand and gravel that makes the river bed. Therefore, we add

an outlet to the bottom of the fourth tank and get the final structure shown in fig. 12, which is obtained at the second trial. Though the fit between observed and calculated discharge is not so good, we do not make more trials, because Kitsu River at Kamo shows large change of river bed and it is difficult to get good discharge data.

infiltration rate (mm/day)	
10	20%
30	40%
75	30%
120	10%

Table 4

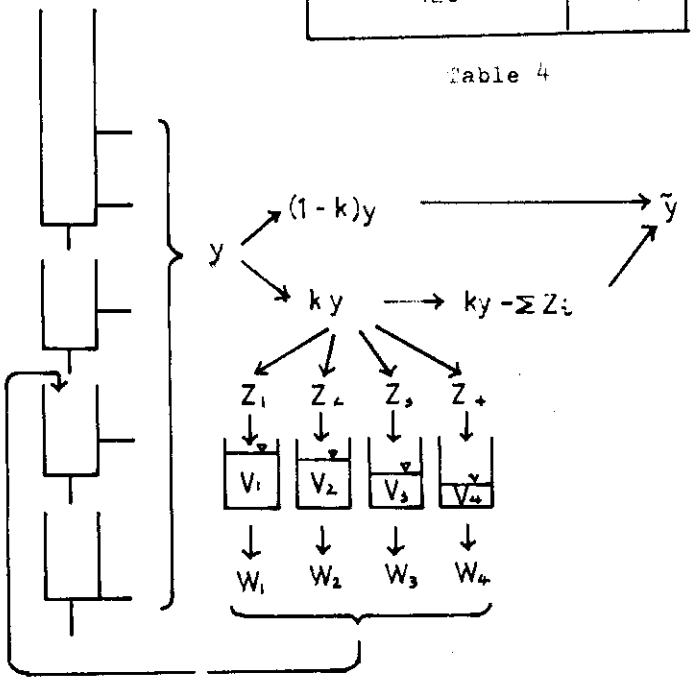

Fig. 21

6.7. For the calculation of final results shown in figs. 13 — 18, we use the initial values shown in table 5.

These values are so determined as to get the calculated discharge that shows good fit with the observed one at the beginning part of hydrograph. There are so many uncertainties that we cannot determine them exactly. So, considering the seasonal change of storage in each tank, we determine the initial value as round number. In the case of Bikin

	1st zone	2nd zone	3rd zone	4th zone
XP	0	0	30	50
XS	50	100	200	200
XA	0	0	0	0
XB	0	0	0	0
XC	0	0	0	0
XD	0	100	200	500
XCH	0.5			

Bird Creek

	1st zone	2nd zone	3rd zone	4th zone
XP	0	0	0	0
XS	50	50	50	50
XA	0	0	0	0
XB	0	0	0	0
XC	0	0	0	0
XD	0	0	0	0
XCH	0			

Wollombi Brook

	1st zone	2nd zone	3rd zone	4th zone
XP	0	50	50	50
XS	100	250	250	250
XA	0	0	0	0
XB	0	0	0	0
XC	0	0	100	600
XD	0	0	500	3,000
XCH	2.8			

Sanaga River

	1st zone	2nd zone	3rd zone	4th zone
XP	0	0	40	40
XS	0	0	150	150
XA	0	0	0	0
XB	0	0	0	0
XC	0	0	50	100
XD	0	0	170	700
XCH	0.8			

Nam Mune

year	XA	XB	XC	XCH
1961	5	15	300	10
1962	10	30	500	15
1963	0	30	400	13
1964	0	20	400	11
1965	0	70	300	16
1966	0	50	300	14
1967 1968	0	30	400	13

Bikin River

XA	XB	XC	XD
0	0	30	800

Kitsu River

XP, XS are initial storages of primary and secondary soil moisture

XA, XB, XC, XD are initial storages of free water in the 1st, 2nd, 3rd and 4th tanks

XCH is initial channel storage

Table 5 Initial values

River, we must determine the initial values every year, and in the years 1967 and 1968 we have no observed discharges to determine the initial values. So we have to assume them as table 5 shows, which are nearly equal to the mean values of the past seven years.

9. Some remarks

9.1. We think, the most important point of our model is the simulation of the change of wet area by dividing the basin into zones. We hope this model becomes better by some modifications of the structure for soil moisture, about which we have very scarce experiences because our country is always wet.

9.2. Sometimes, in our model, the capacity of primary soil moisture is small in river-side zone and large in mountain-side zone. This is somewhat curious, we think, because soil layer must be thick near river and thin in mountain region. We can modify it, by making the capacity of secondary soil moisture of river-side zone so large, as to get the model, where the total soil moisture is large in river-side zone and small in mountain-side zone. It may be reasonable to assume that in the river-side zone, the capacity of total soil moisture is large but the capacity of primary soil moisture is small. We suppose, under this assumption, we can get good results, if we can set the parameters at appropriate values.

9.3. The most important but difficult problem must be the areal fluctuation of precipitation. This time, we use the mean precipitation for simplicity. We think, however, it may be better to use different mean precipitation for each zone, assuming it is small in river-side zone and large in mountain-side zone.

9.4. There is another method, which is used frequently in runoff

analysis of Japanese rivers. If there are several rain gauge stations in a basin, each of the precipitation data is turned into discharge by the tank model in parallel. Then, the final result is obtained by making the mean of every discharge series. This method gives good results, when it rains heavily only at one rain gauge station, and there occurs a local large surface flow. If we use mean precipitation as input, we cannot get the hydrograph showing good fit with the observed one, and in such a case there appears a rapid and steep but small peak of discharge owing to the local heavy rainfall.

We can apply this method to the composite tank model by setting several top tanks to each zone corresponding to each rain gauge station as shown in fig. 22. Though there may be several top tanks in one zone, there are only single second, third and fourth tank in one zone. In this way we can simulate the local surface runoff caused by local heavy rainfall.

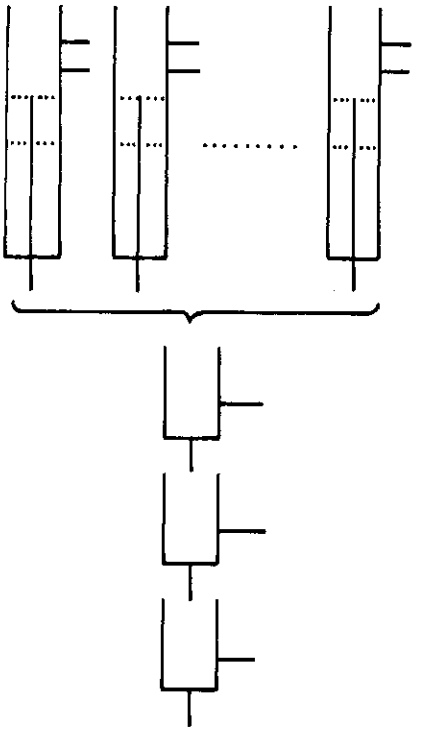

Fig. 22

10. Program

10.1. Main parts of the program are shown in Appendix A. The meaning of variables and constants are given in fig. 23 or as follows:

P: daily precipitation

Q: observed daily discharge

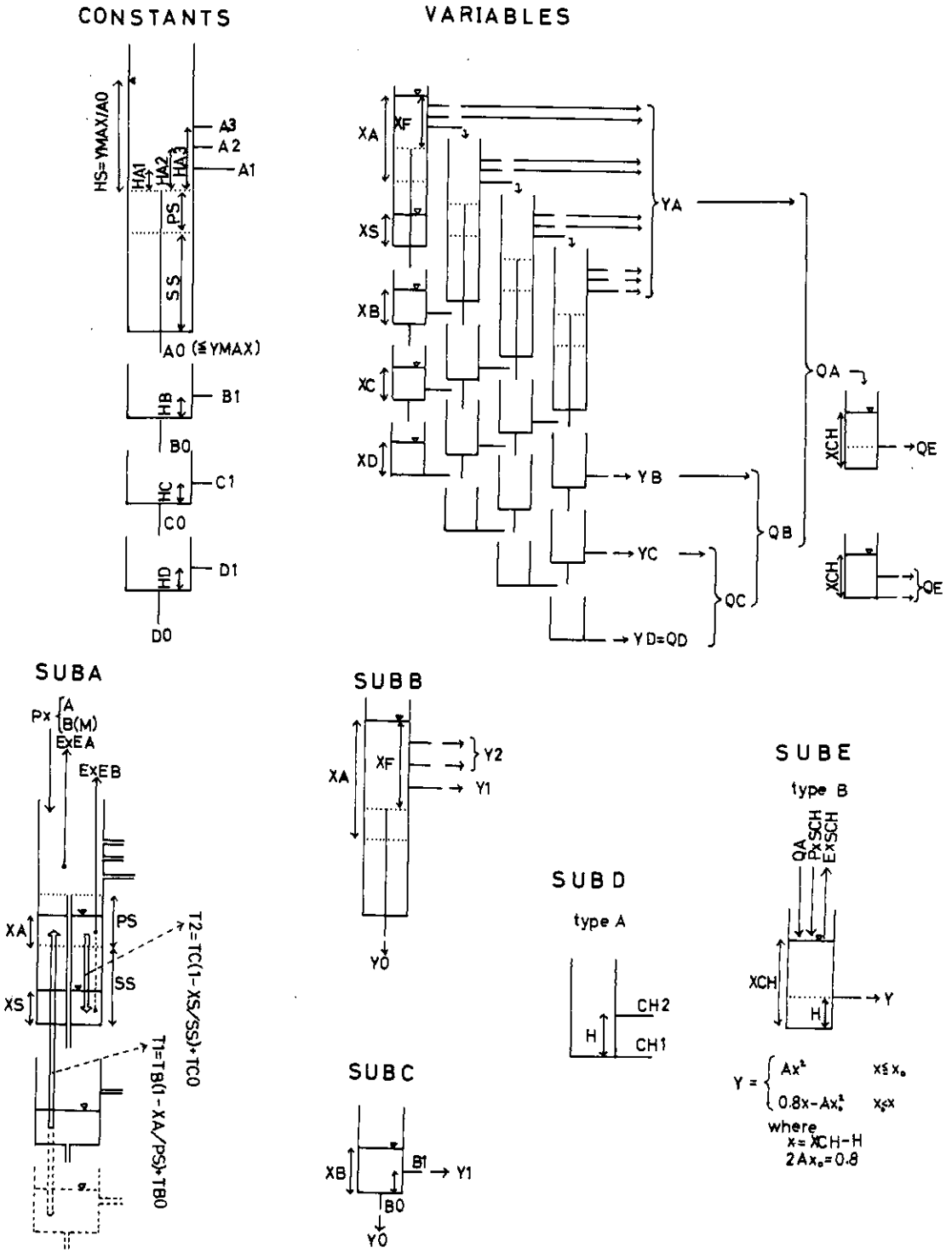
CONSTANTS
VARIABLES
HS=YMAX/A0
A3
A2
A1
HA1
HA2
HA3
PS
SS
A0 (≦YMAX)
HB
B1
B0
HC
C1
C0
HD
D1
D0
XA
XF
XS
XB
XC
XD
YA
YB
YC
YD=QD
QA
QB
QC
XCH
QE
SUBA
Px
A
B(M)
ExEA
ExEB
XA
XS
PS
SS
T2=TC(1-XS/SS)+TC0
T1=TB(1-XA/PS)+TB0
SUBB
XA
XF
Y2
Y1
Y0
SUBC
XB
B1
Y1
B0
Y0
SUBD
type A
H
CH2
CH1
SUBE
type B
QA
PxSCH
ExSCH
XCH
H
Y
Y = Ax² x≦x₀
0.8x-Ax₀² x₀<x
where
x=XCH-H
2Ax₀=0.8

Fig. 23

	Area of zones (%)				Top tank														
					Soil moisture					Free water									
					capacity of primary soil moisture				capacity of secondary soil moisture	outlet to next zone		outlet to river channel				outlet for infiltration		
	S1	S2	S3	S4	PS1	PS2	PS3	PS4	SS	HA1	A1	HA2	A2	HA3	A3	AO	YMAX	HS
Bird Creek	74	18	6	2	50	50	50	50	250	--	--	10	0.25	35	0.35	0.25	15	60
Wollombi Brook	61	25	10	4	70	60	50	40	250	--	--	10	0.1	30	0.2	0.5	15	30
Sanaga River	61	25	10	4	50	50	50	50	250	10	0.3	--	--	--	--	0.25	12.5	50
Nam Mune	53.3	26.7	13.3	6.7	40	40	40	40	150	10	0.05	--	--	--	--	0.05	7.5	150

	Second tank			Third tank			Fourth tank			River channel						Time lag (day)
	outlet for horizontal transfer		outlet for infiltra -tion	outlet for horizontal transfer		outlet for infiltra -tion	outlet for horizontal transfer		outlet for infiltra -tion	type A			type B			
	HB	B1	BO	HC	C1	CO	HD	D1	DO	H	CH1	CH2	A	SCH	H	
Bird Creek	5	0.10	0.12	5	0.01	0.015	0	0.0005	0	-	--	--	0.25	0.4%	0.1	1
Wollombi Brook	0	0.04	0.04	0	0.004	0.004	0	0.001	0	-	--	--	0.08	0.4%	0.2	0
Sanaga River	0	0.10	0.03	0	0.015	0.005	0	0.001	0	6	0.15	0.15	--	--	--	1
Nam Mune	0	0.065	0.015	0	0.003	0.006	0	0.003	0	1	0.05	0.15	--	--	--	1

	Top tank							Second tank			Third tank		
	outlet for discharge				outlet for infiltration			outlet for discharge		outlet for infiltration	outlet for discharge		outlet for infiltration
	HA1	A1	HA2	A2	AO	YMAX	HS	HB	B1	BO	HC	C1	CO
Bikin River	0	0.05	20	0.05	0.20	--	--	0	0.03	0.06	0	0.002	0
Kitsu River	5	0.12	25	0.23	0.30	7.5	25	10	0.04	0.06	10	0.016	0.024

	Fourth tank			River channel			Time lag (day)
	outlet for discharge		outlet for infiltration	type A			
	HD	D1	DO	H	CH1	CH2	
Bikin River	--	--	--	10	0.1	0.2	1
Kitsu River	0	0.001	0.0003	--	--	--	1

Table 6

E: daily evaporation

I: zone number

J: number of day ($1 \leqq J \leqq 365$ or 366)

S(I): area of I-th zone (ratio to total basin area)

SCH: area of river surface and riparian area

PP(K): weight for K-th rainfall station

PA: multiplication constant for basin precipitation

PB(M): multiplication factor for basin precipitation, where PB(M) is variable depending on month ($1 \leqq M \leqq 12$)

EA: coefficient for evapotranspiration, when it is subtracted from free water of top tank

EB: coefficient for evapotranspiration, when it is subtracted from confined water of top tank

R(I)=S(I)/S(I+1): multiplication constant which turns the output from the I-th zone into input to the (I+1)-th zone.

SQ: monthly sum of the observed discharge

SQE: monthly sum of the estimated discharge

QO: non-negative additive constant to discharge for representing the hydrographs in semi-logarithmic form

10.2. Numerical values of constants are shown in table 6. These are shown in fig. 12 previously.

10.3. Appendix B shows the printed form of the computed results, where informations are given mainly by hydrographs. There are six curves, that shows $\log(q_0+ q)$, $\log(q_0+ \tilde{q})$, $\log(q_0+ y_1+ y_2+ y_3+ y_4)$, $\log(q_0+ y_2+ y_3 + y_4)$, $\log(q_0+ y_3+ y_4)$ and $\log(q_0+ y_4)$, where

q_0: non-negative constant, $q_0= 10^{-3}$ mm/day for Bird Creek,

$q_0= 10^{-2}$ mm/day for Wollombi Brook and $q_0 = 0$ for other four rivers.

q : observed discharge

$\tilde{q}$: calculated discharge

y_1: output from the top tank to the river channel

y_2: output from the second tank of the river-side zone

y_3: output from the third tank of the river-side zone

y_4: output from the fourth tank of the river-side zone

Investigating these curves, we can get many informations about each discharge component. Numerical daily value of precipitation, evaporation, observed discharge and calculated discharge are also printed with hydrograph. Though there are many variables, such as storage in each tank, horizontal and vertical output from each tank, etc., we dare not print them all. Because we think, that too much information is bad for judgement and imagination. Instead of printing all variables every day, we print monthly data every year as shown in Appendix B. They are storage amount in each tank at the end of every month and monthly total of observed and calculated discharges.

10.4. There isn't any measure for criteria in our program such as

$$\Sigma(\tilde{q} - q)^2/n/(\Sigma q/n)^2, \qquad \text{a)}$$

$$\Sigma(\log(\tilde{q} + q_o) - \log(q + q_o))^2/n, \qquad \text{b)}$$

$$\Sigma((\tilde{q} - q)^2/(q + q_o)^2)/n, \qquad \text{c)}$$

where q and $\tilde{q}$ are observed and calculated discharges, q_o is some non negative constant, and n is the number of data.

Among them the first one is the most usual measure, normalized mean square error. But we think, it isn't good, from the following reason, If we judge by this criteria, judgement depends mainly on the flood part of hydrograph which may have large measurement error.

The second one is also mean square error, measured in logarithmic

scale which is used for plotting hydrograph. The third one is nearly equal to the second one from the following relation

$$\log(\tilde{q} + q_o) - \log(q + q_o) = \log((\tilde{q} + q_o)/(q + q_o))$$

$$= \log\left(\frac{\tilde{q} - q + q + q_o}{q + q_o}\right) = \log\left(1 + \frac{\tilde{q} - q}{q + q_o}\right)$$

$$\fallingdotseq \frac{\tilde{q} - q}{q + q_o}$$

Though the second or third measure may be rather good for criteria, we do not like to use them. About ten years ago, we tried to use some criteria in vain. Hydrographs, shown in Appendix B, are full of informations. We are not bold enough to throw away the hydrographs and rely upon a single measure of criteria. The criteria cannot teach us the way we should go, but from hydrographs we can find the way to the next trial. This is the reason why our program does not contain the measure of criteria.

```
      ¥JOB     COMPTANK

      ¥TFTC    MAIN

 1          COMMON XA(4),XS(4),XB(4),XC(4),XD(4),HS(4),HA1(4),HA2(4),
 1         +  HA3(4),PS(4),SS(4),A0,A1,A2,A3,HB,B0,B1,HC,C0,C1,HD,D0,
 1         +  D1,S(4),PP(13),PA,PB(12),EA,EB,TB,TB0,TC,TC0,XCH,H,CH1,
 1         +  CH2,SCH,A,X0,LAG,NPLO,NSCA,SCAL(6),LY,DY,YMIN,Q0
 2          INTEGER YEAR,YSTAT,YEND
 3          DIMENSION Q(366),P(366),E(366),QE(371),QA(371),QB(371),
 3         +  QC(371),QD(371),PK(366),QNAME(2),R(4),MONTH(12)
 4          DIMENSION CBUF(120),ISCAL(5),CM(12),PLOT(6),CHAR(6)
 5          DATA MONTH/31,28,31,30,31,30,31,31,30,31,30,31/,
 5         +  MSTA/1/,MEND/12/
 6          DATA CHAR/'*        +        .        ,        -        .'/
 7          CM(1)=1HJ
 8          CM(2)=1HF
 9          CM(3)=1HM
10          CM(4)=1HA
11          CM(5)=1HM
12          CM(6)=1HJ
13          CM(7)=1HJ
14          CM(8)=1HA
15          CM(9)=1HS
16          CM(10)=1HO
17          CM(11)=1HN
18          CM(12)=1HD
      C
19        1 PAUSE
20          REWIND 1
      C
      C
      C  QNAME:  NAME OF DISCHARGE STATION
      C  YSTAT:  FIRST YEAR,  YEND:  LAST YEAR
      C  NP:  NUMBER OF RAINFALL STATIONS
      C
21          READ (1) QNAME,YSTAT,YEND,NP
      C
      C
      C  CREAD:  READ CONSTANTS IN COMMON BLOCK
      C
22          CALL CREAD
      C
      C
      C  PREPARATION FOR PLOTTING HYDROGRAPH
      C
23          AMIN=ALOG10(YMIN+Q0)
24          DO 300 N=1,NSCA
25      300 ISCAL(N)=(ALOG10(SCAL(N)+Q0)-AMIN)*DY+1.
      C
      C
      C  RATIO OF AREA OF ADJACENT ZONES
      C
26          P(1)=0.
```

```
27          DO 100 I=2,4
28      100 R(I)=S(I-1)/S(I)
      C
      C
      C  MULTIPLYING COEFFICIENT FOR P
      C
29          SPP=0.
30          DO 101 K=1,NP
31      101 SPP=SPP+PP(K)
32          DO 102 K=1,NP
33      102 PP(K)=PP(K)/SPP
34          DO 103 M=1,12
35      103 PB(M)=PB(M)*PA
      C
      C
      C  CLEAR CONTENT OF ADDRESSES FOR TIME LAG
      C
36          DO 104 J=366,370
37          QE(J)=0.
38          QA(J)=0.
39          QB(J)=0.
40          QC(J)=0.
41      104 QD(J)=0.
42          JLAG=366
      C
      C
      C  ENTRY OF COMPUTING LOOP FOR ONE YEAR
      C
      C  READ  Q,E,P  OF ONE YEAR
      C
43        2 READ (1) YEAR
44          READ (1) Q
45          READ (1) E
      C
      C  WEIGHTED MEAN OF P
      C
46          DO 120 J=1,366
47      120 P(J)=0.
48          DO 140 K=1,NP
49          READ (1) PK
50          DO 130 J=1,366
51      130 P(J)=P(J)+PK(J)*PP(K)
52      140 CONTINUE
      C
      C
      C  LEAP YEAR OR NOT
      C
53          MONTH(2)=28
54          JN=365
55          IF (MOD(YEAR,4).NE.0) GO TO 150
56          MONTH(2)=29
57          JN=366
58      150 CONTINUE
      C
```

```
      C
      C  TRANSFER SOME VARIABLES FROM LAST YEAR-END TO THE HEAD
      C  OF THIS YEAR  (EFFECT OF TIME LAG)
      C
59          DO 170 J=1,5
60          QE(J)=QE(JLAG)
61          QA(J)=QA(JLAG)
62          QB(J)=QB(JLAG)
63          QC(J)=QC(JLAG)
64          QD(J)=QD(JLAG)
65      170 JLAG=JLAG+1
66          JLAG=JN+1
      C
67          WRITE (6,20) QNAME,YEAR
      C
      C
      C  CALCULATION FOR ONE YEAR
      C
68          JE=0
69          DO 270 M=MSTA,MEND
70          SQ=0.
71          SQE=0.
72          JS=JE+1
73          JF=JE+MONTH(M)
      C
      C
      C  CALCULATION FOR ONE MONTH
      C
74          DO 230 J=JS,JF
75          YA=0.
76          Y1=0.
77          YB=0.
78          YC=0.
79          YD=0.
      C
      C
      C  MULTIPLY COEFFICIENT TO P
      C
80          PJ=P(J)*PB(M)
      C
      C
      C  MAIN PART OF CALCULATION
      C
81          DO 200 I=1,4
      C
      C
      C  EVT AND TRANSFER TO CONFINED WATER
      C
82          CALL SUBA(E(J),EA,FB,PS(I),SS(I),XA(I),XS(I),XB(I),XC(I),
82         +  XD(I),TB,TBO,TC,TCO)
      C
      C
      C  INPUT TO THE TOP TANK OF I-TH ZONE
      C  Y1*R(I):  INPUT FROM (I-1)-TH ZONE
```

```
      C
 83         PI=PJ+(Y1*R(I))
      C
      C
      C  CALCULATION OF TOP TANK
      C
 84         CALL SUBB(PI,XA(I),Y2,Y1,Y0,HS(I),PS(I),HA1(I),HA2(I),
 84       +  HA3(I),A0,A1,A2,A3)
 85         YA=YA+Y2*S(I)
      C
      C
      C  CALCULATION OF 2-ND, 3-RD, 4-TH TANK
      C
 86         Y0=Y0+YB*R(I)
 87         CALL SUBC(Y0,XB(I),YB,Y0,HB,B0,B1)
 88         Y0=Y0+YC*R(I)
 89         CALL SUBC(Y0,XC(I),YC,Y0,HC,C0,C1)
 90         Y0=Y0+YD*R(I)
 91         CALL SUBC(Y0,XD(I),YD,Y0,HD,D0,D1)
 92     200 CONTINUE
      C
      C
      C  OUTPUT FROM THE TANK-MODEL
      C
 93         YA=YA+Y1*S(4)
 94         YB=YB*S(4)
 95         YC=YC*S(4)
 96         YD=YD*S(4)
      C
      C
      C  ESTIMATED Q COMPONENTS WITH TIME LAG
      C
 97         JL=J+LAG
 98         QD(JL)=YD
 99         QC(JL)=YD+YC
100         QB(JL)=YD+YC+YB
101         QA(JL)=YD+YC+YB+YA
      C
      C
      C  DEFORMATION BY RIVER CHANNEL
      C
102         QCH=QA(JL)+(PJ-E(J))*SCH
103         CALL SUBD(QCH,QE(JL),XCH,H,CH1,CH2)
      C
      C
      C  MONTHLY TOTAL OF Q
      C
104         SQ=SQ+Q(J)
105         SQE=SQE+QE(J)
106     230 CONTINUE
      C
      C
      C  PRINT:  MONTHLY TOTAL OF Q, MONTHLY END-VALUE OF
      C      STORAGE OF EVERY TANK
```

```
      C
107         WRITE (6,30) M,SQ,SQF
108         DO 270 I=1,4
109         XP=PS(I)
110         XF=XA(I)-PS(I)
111         IF (XF.GE.0.) GO TO 250
112         XF=0.
113         XP=XA(I)
114     250 IF (I.NE.1) GO TO 260
115         WRITE (6,40) I,XF,XP,XS(I),XB(I),XC(I),XD(I),XCH
116         GO TO 270
117     260 WRITE (6,40) I,XF,XP,XS(I),XB(I),XC(I),XD(I)
118     270 CONTINUE
      C
119      20 FORMAT(1H12A8/1H I4,5X1HQ9X2HQF15X2HXF8X2HXP8X2HXS8X2HXB
119       +  8X2HXC8X2HXD9X3HXCH)
120      30 FORMAT(1H I4,2F10.4)
121      40 FORMAT(1H 28X1HSI1,10F10.2)
      C
      C
      C  HYDROGRAPH PLOTTING
      C     GBUF(L):  BUFFER FOR ONE LINE FOR GRAPH PLOTTING
      C     LY:       CHARACTER-SIZE OF GBUF
      C     DY:       ASSIGNED CHARACTER-SIZE FOR LOG10
      C     YMIN:     MINIMUM OF COORDINATE
      C     AMIN:     LOG(YMIN+QO)
      C     SCAL(N):  SCALE POINT ON COORDINATE (N=1,...,NSCA)
      C     ISCA:     POSITION OF SCALE POINT
      C     NPLO:     NUMBER OF PLOTTED HYDROGRAPHS
      C
122     310 WRITE (6,60) YEAR
123      60 FORMAT(1H1I4)
124         JE=0
125         IM=2
      C
126         DO 390 M=MSTA,MEND
127         JS=JE+1
128         JE=JE+MONTH(M)
129         IF (IM.NE.0) GO TO 320
130         WRITE (6,60)
131         IM=2
132     320 IM=IM-1
      C
133         DO 390 J=JS,JE
134         DO 330 L=1,LY
135     330 GBUF(L)=1H
      C
136         AM=1H
137         IF (J.NE.JS) GO TO 350
138         AM=CM(M)
139         DO 340 N=1,NSCA
140         IPOS=ISCAL(N)
141     340 GBUF(IPOS)=1HI
      C
```

```
  350 PLOT(1)=Q(J)+QO
      PLOT(2)=QE(J)+QO
      PLOT(3)=QA(J)+QO
      PLOT(4)=QB(J)+QO
      PLOT(5)=QC(J)+QO
      PLOT(6)=QD(J)+QO
C
      N=NPLO
  360 IF (PLOT(N).GT.YMIN+QO) GO TO 370
      IPOS=1
      GO TO 380
  370 IPOS=(ALOG10(PLOT(N))-AMIN)*DY+1.
      IF (IPOS.LE.0) IPOS=1
      IF (IPOS.GT.LY) IPOS=LY
  380 GBUF(IPOS)=CHAR(N)
      N=N-1
      IF (N.GT.0) GO TO 360
C
      WRITE (6,70) AM,P(J),F(J),Q(J),QE(J),(GBUF(L),L=1,LY)
   70 FORMAT(1H A1,2F5.1,2F7.4,106A1)
  390 CONTINUE
C
      IF (YEAR.LT.YEND) GO TO 2
      GO TO 1
      END
```

```
      ¥TFTC   SUBA
      C
      C  EVT AND TRANSFER TO CONFINED WATER
      C
 1          SUBROUTINE SUBA(EVT,FA,EB,PS,SS,XA,XS,XB,XC,XD,
 1        +  TB,TB0,TC,TC0)
      C
      C
      C  EVT FROM FREE WATER OF TOP TANK
      C
 2          E=EVT*FA
      C
      C
      C  IF NO FREE WATER IN TOP TANK
      C
 3          IF (XA.LE.PS) GO TO 110
      C
 4          X=XA-PS-E
      C
      C
      C  IF FREE WATER OF TOP TANK IS NOT SUFFICIENT FOR EVT
      C
 5          IF (X.LT.0.) GO TO 100
      C
 6          XA=X+PS
 7          GO TO 150
      C
 8      100 XA=PS
 9          E=-X
      C
      C
      C  EVT FROM CONFINED WATER
      C
10      110 E=E*FB/FA
11          XA=XA-E
12          IF (XA.GE.0.) GO TO 120
13          E=-XA
14          XA=0.
15          XS=XS-E
16          IF (XS.LT.0.) XS=0.
17      120 CONTINUE
      C
      C
      C  TRANSFER TO PRIMARY SOIL MOISTURE FROM LOWER FREE WATER
      C
18          T1=TB*(1.-XA/PS)+TB0
19          XA=XA+T1
20          XB=XB-T1
21          IF (XB.GE.0.) GO TO 150
22          XC=XC+XB
23          XB=0.
24          IF (XC.GE.0.) GO TO 150
25          XD=XD+XC
```

```
26          XC=0.
27          IF (XD.GE.0.) GO TO 150
28          XA=XA+XD
29          XD=0.
30      150 CONTINUE
      C
      C
      C  TRANSFER TO SECONDARY S.M. FROM PRIMARY S.M.
      C
31          X=SS-XS
32          IF (X.EQ.0.) GO TO 200
33          T2=TC*(1.-XS/SS)+TCO
34          IF (T2.GT.X) T2=X
35          IF (T2.GT.XA) T2=XA
36          XA=XA-T2
37          XS=XS+T2
38      200 RETURN
39          END
```

```
¥TFTC   SUBD

C
C  DEFORMATION IN RIVER CHANNEL (TYPE-A)
C
      SUBROUTINE SUBD(QCH,Y,XCH,H,CH1,CH2)
      XCH=XCH+QCH
      IF (XCH.GT.0.) GO TO 100
      XCH=0.
      Y=0.
      GO TO 120
  100 Y=XCH*CH1
      IF (XCH.GT.H) Y=Y+(XCH-H)*CH2
      XCH=XCH-Y
  120 RETURN
      END
```

```
YTFTC   SUBE

C
C  DEFORMATION IN RIVER CHANNEL (TYPE-B)
C
      SUBROUTINE SUBE(QCH,Y,XCH,H,A,X0)
      XCH=XCH+QCH
      Y=0.
      IF (XCH.GT.0.) GO TO 100
      XCH=0.
      GO TO 150
  100 IF (XCH.LE.H) GO TO 150
      XF=XCH-H
      IF (XF.GE.X0) GO TO 110
      Y=A*XF**2
      GO TO 120
  110 Y=0.8*XF-A*X0**2
  120 XCH=XCH-Y
  150 RETURN
      END
```

YTFTC SUBB

```
C
C  CALCULATION OF TOP TANK
C
      SUBROUTINE SUBB(P,XA,Y2,Y1,Y0,HS,PS,HA1,HA2,HA3,
     +  A0,A1,A2,A3)
      XA=XA+P
      Y2=0.
      Y1=0.
      Y0=0.
      IF (XA.LE.PS) GO TO 110
      XF=XA-PS
      IF (XF.LE.HA1) GO TO 100
      Y1=(XF-HA1)*A1
      IF (XF.LE.HA2) GO TO 100
      Y2=(XF-HA2)*A2
      IF (XF.LE.HA3) GO TO 100
      Y2=Y2+(XF-HA3)*A3
  100 IF (XF.GT.HS) XF=HS
      Y0=XF*A0
      XA=XA-Y0-Y1-Y2
  110 RETURN
      END
```

YTFTC SUBC

```
C
C  CALCULATION OF 2-ND, 3-RD, 4-TH TANK
C
      SUBROUTINE SUBC(P,XB,Y1,Y0,HB,B0,B1)
      XB=XB+P
      Y1=0.
      IF (XB.GT.HB) Y1=(XB-HB)*B1
      Y0=XB*B0
      XB=XB-Y1-Y0
      RETURN
      END
```

BIRD CREEK

1958	Q	QE		XF	XP	XS	XB	XC	XD	XCH
1	2.1985	4.0456								
			S1	0.	25.17	222.53	0.	0.	0.	0.49
			S2	2.04	50.00	250.00	0.60	12.98	150.45	
			S3	2.04	50.00	250.00	2.28	26.98	653.05	
			S4	2.04	50.00	250.00	6.09	48.89	1438.26	
2	0.6312	1.1303								
			S1	0.	20.43	237.76	0.	0.	0.	0.77
			S2	7.64	50.00	250.00	7.97	2.72	146.22	
			S3	7.64	50.00	250.00	9.65	8.09	657.92	
			S4	7.64	50.00	250.00	10.34	26.82	1462.90	
3	50.3817	39.9511								
			S1	4.46	50.00	250.00	11.49	32.36	6.35	1.00
			S2	4.46	50.00	250.00	26.18	91.08	163.46	
			S3	4.46	50.00	250.00	43.82	155.19	687.35	
			S4	4.46	50.00	250.00	68.41	237.26	1522.37	
4	18.1816	13.0242								
			S1	1.75	50.00	250.00	0.51	13.57	17.84	0.57
			S2	1.75	50.00	250.00	0.51	74.46	203.42	
			S3	1.75	50.00	250.00	0.51	157.17	763.52	
			S4	1.75	50.00	250.00	0.51	272.51	1660.49	
5	5.7136	3.2188								
			S1	0.	42.26	250.00	0.	0.	0.	0.50
			S2	7.96	50.00	250.00	2.40	0.32	216.37	
			S3	7.96	50.00	250.00	2.40	53.17	814.50	
			S4	7.96	50.00	250.00	2.40	151.51	1775.42	
6	0.4371	2.0459								
			S1	0.	13.36	234.67	0.	0.	0.	0.47
			S2	0.	44.84	250.00	0.	1.80	163.22	
			S3	0.	44.84	250.00	0.	6.03	809.74	
			S4	0.	44.84	250.00	0.	55.73	1824.81	
7	6.8204	8.6507								
			S1	0.	33.15	246.13	0.	0.	0.	0.61
			S2	2.39	50.00	250.00	2.30	4.77	133.99	
			S3	2.39	50.00	250.00	4.44	6.24	793.81	
			S4	2.39	50.00	250.00	5.94	31.21	1852.64	
8	2.9124	4.0611								
			S1	0.	13.03	250.00	0.	0.	0.	0.33
			S2	0.	45.54	250.00	0.	0.	100.99	
			S3	0.	45.54	250.00	0.	0.	766.99	
			S4	0.	45.54	250.00	0.	0.29	1867.89	
9	1.8318	3.1960								
			S1	0.	20.27	250.00	0.	0.	0.	0.36
			S2	2.31	50.00	250.00	1.50	0.32	73.85	
			S3	2.31	50.00	250.00	1.50	0.37	742.19	
			S4	2.31	50.00	250.00	1.50	6.83	1858.29	
10	0.0745	0.2607								
			S1	0.	0.24	211.60	0.	0.	0.	0.27
			S2	0.22	50.00	250.00	0.71	0.27	9.04	
			S3	0.22	50.00	250.00	0.71	0.27	668.88	
			S4	0.22	50.00	250.00	0.71	0.27	1804.82	
11	0.5379	0.4763								
			S1	0.	0.	197.53	0.	0.	0.	0.35
			S2	0.	43.54	250.00	0.	0.	0.	
			S3	1.59	50.00	250.00	0.47	1.15	631.29	
			S4	1.59	50.00	250.00	0.47	3.47	1779.27	
12	0.1606	0.4553								
			S1	0.	11.49	182.07	0.	0.	0.	0.36
			S2	0.	39.57	250.00	0.	0.	0.	
			S3	7.66	50.00	250.00	4.62	1.15	601.17	
			S4	7.66	50.00	250.00	4.68	1.16	1762.17	

	P	E	Q	Q̄
1958				
J	0.	1.	0.0355	0.0608
	0.	1.	0.0292	0.0544
	0.	2.	0.0271	0.0472
	0.	1.	0.0230	0.0413
	0.	1.	0.0198	0.0363
	0.	2.	0.0188	0.0321
	0.	1.	0.0177	0.0286
	0.	2.	0.0167	0.0261
	0.	2.	0.0146	0.0239
	0.	2.	0.0136	0.0220
	1.	2.	0.0125	0.0204
	4.	0.	0.0125	0.0198
	0.	0.	0.0136	0.0222
	2.	0.	0.0146	0.0213
	0.	0.	0.0167	0.0226
	0.	1.	0.0146	0.0217
	0.	1.	0.0125	0.0203
	0.	1.	0.0125	0.0193
	16.	0.	0.0177	0.0184
	12.	0.	0.1025	0.3634
	2.	0.	0.2359	1.1312
	0.	1.	0.3317	0.7998
	0.	1.	0.2248	0.3539
	0.	1.	0.1710	0.2028
	0.	2.	0.1482	0.1462
	0.	2.	0.1419	0.1157
	0.	1.	0.1452	0.0973
	0.	1.	0.1264	0.0841
	0.	1.	0.0980	0.0739
	0.	2.	0.0719	0.0636
	0.	1.	0.0575	0.0551
F	0.	1.	0.0490	0.0479
	0.	1.	0.0405	0.0420
	0.	1.	0.0334	0.0374
	0.	3.	0.0292	0.0336
	3.	0.	0.0271	0.0300
	1.	0.	0.0251	0.0311
	0.	1.	0.0240	0.0300
	0.	1.	0.0230	0.0280
	2.	0.	0.0209	0.0268
	1.	0.	0.0198	0.0279
	0.	0.	0.0198	0.0273
	0.	1.	0.0198	0.0264
	0.	1.	0.0188	0.0251
	0.	1.	0.0177	0.0243
	0.	1.	0.0167	0.0236
	0.	0.	0.0167	0.0229
	0.	1.	0.0167	0.0226
	0.	2.	0.0146	0.0221
	0.	1.	0.0136	0.0212
	0.	1.	0.0136	0.0208
	0.	3.	0.0146	0.0201
	0.	1.	0.0146	0.0186
	0.	2.	0.0146	0.0184
	0.	2.	0.0167	0.0173
	0.	4.	0.0167	0.0164
	13.	1.	0.0209	0.0147
	4.	0.	0.0292	0.1543
	0.	1.	0.0439	0.2995

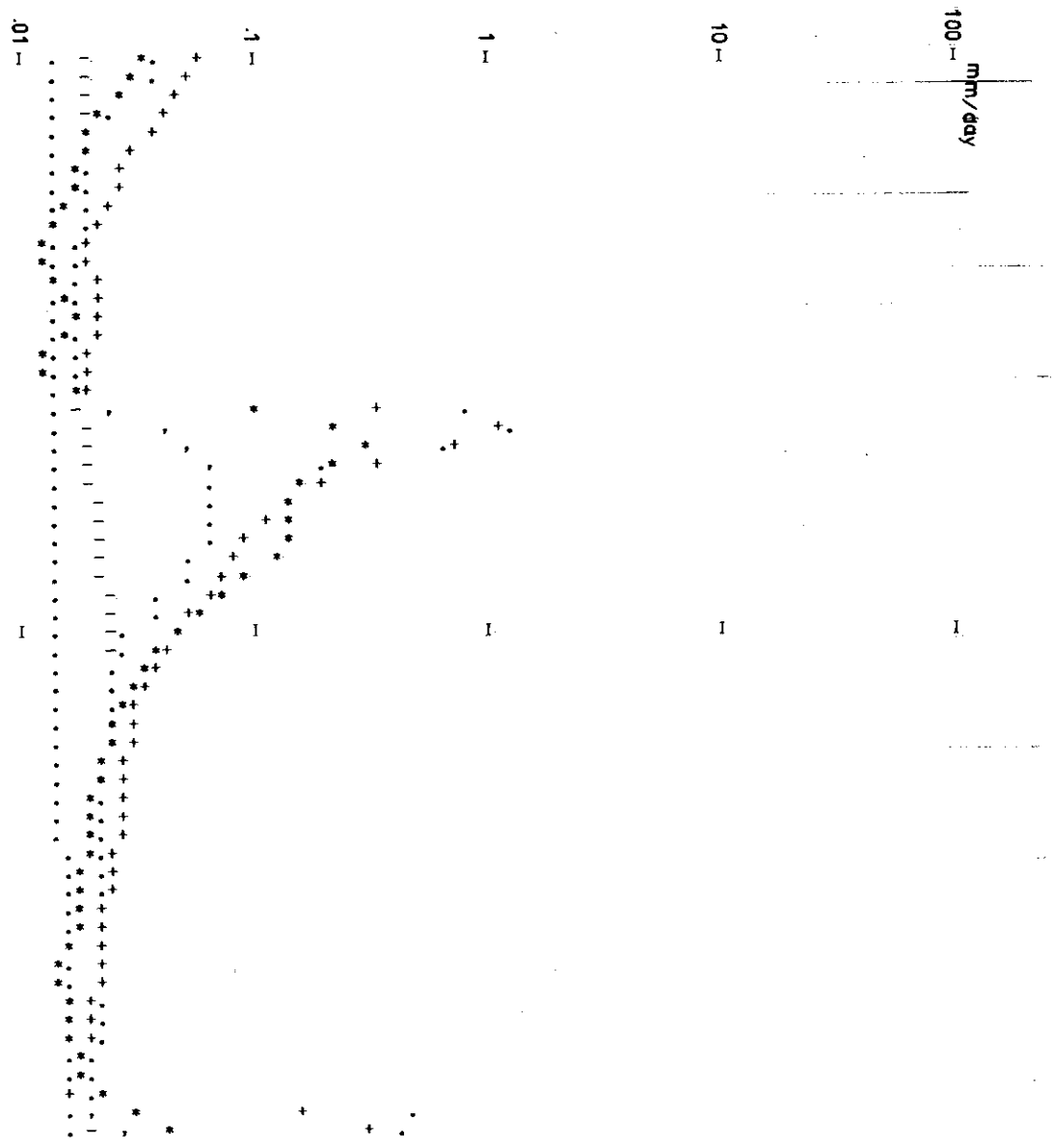
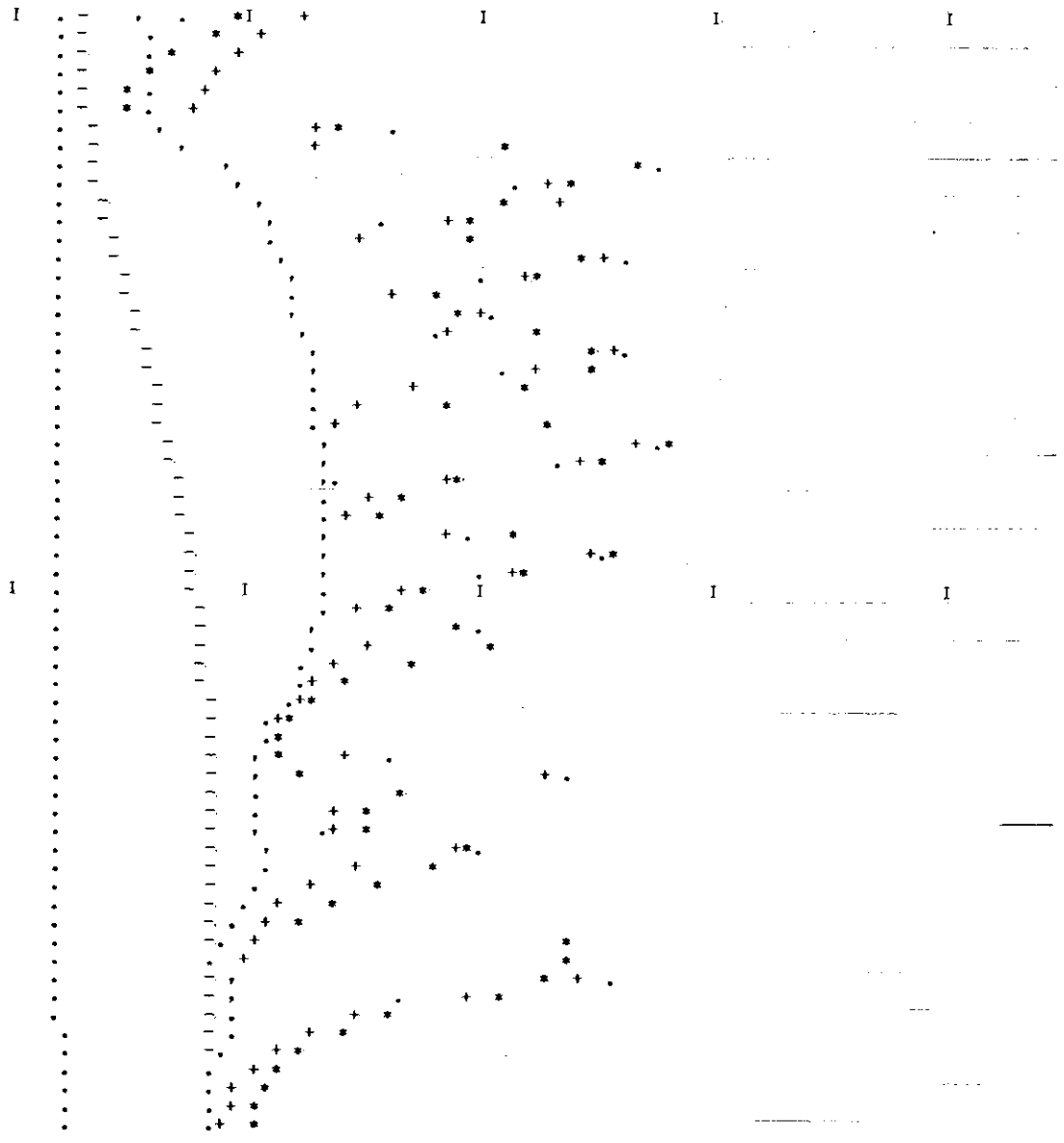
M	0.	1.	0.0980	0.1787I
	0.	1.	0.0741	0.1228
	0.	2.	0.0501	0.0947
	0.	1.	0.0376	0.0765
	0.	0.	0.0292	0.0660
	12.	0.	0.0292	0.0583
	2.	0.	0.2654	0.2121
	31.	0.	1.2532	0.2085
	1.	0.	4.7549	4.7055
	7.	0.	2.6539	2.0775
	0.	1.	1.2901	2.3560
	0.	0.	0.9215	0.7857
	17.	1.	0.9215	0.3160
	0.	2.	2.9488	3.4566
	0.	1.	1.8430	1.5734
	6.	0.	0.7003	0.4563
	3.	1.	0.8478	1.0132
	15.	0.	1.7693	0.7549
	0.	2.	3.0225	3.8945
	0.	3.	3.2068	1.8086
	0.	3.	1.6587	0.5225
	1.	1.	0.7372	0.3106
	26.	0.	2.1379	0.2540
	1.	4.	6.8560	5.1622
	0.	2.	3.3911	2.8826
	0.	3.	0.8478	0.7738
	0.	2.	0.5160	0.3683
	8.	3.	0.4055	0.2829
	11.	1.	1.5481	0.7515
	0.	1.	3.9440	3.0009
	0.	4.	1.6218	1.4262
A	0.	4.	0.6266	0.4677I
	8.	2.	0.4423	0.3042
	0.	4.	0.8478	0.8308
	0.	7.	1.1795	0.3613
	0.	4.	0.5529	0.2525
	0.	3.	0.2949	0.2065
	0.	4.	0.2101	0.1782
	0.	2.	0.1607	0.1536
	7.	1.	0.1452	0.1402
	9.	0.	0.1452	0.2900
	0.	5.	0.1843	2.0427
	0.	3.	0.4792	0.4977
	6.	1.	0.3391	0.2589
	6.	2.	0.3391	0.2589
	0.	5.	0.9215	0.8500
	0.	6.	0.6635	0.3131
	0.	5.	0.4055	0.2025
	0.	3.	0.2396	0.1530
	3.	3.	0.1917	0.1261
	4.	6.	2.4696	0.1118
	16.	3.	2.6539	0.1004
	1.	5.	1.9904	2.9553
	0.	7.	1.2901	0.9528
	0.	4.	0.4423	0.3086
	0.	5.	0.2691	0.1930
	0.	4.	0.1880	0.1396
	0.	4.	0.1482	0.1109
	4.	4.	0.1294	0.0939
	0.	4.	0.1191	0.0898
	0.	3.	0.1128	0.0799